SUB-SECTION

RE

TYPE 36S PAGE RE2

TYPE 36S

DETAILS OF COMPONENTS

Transmitter	3G, L/F	3G Low power.	3G, H/F	6G	6D
Frequency range, kc/s	60 - 500	60 - 500	4180 - 17090	100 - 670	60 - 500
Power Supply.	20 kW. Alternator	3 kW. Alternator	20 kW. Alternator	20 kW. Alternator	20 volt Battery
Filament Supply.	3 kW. Alternator	3 kW. Alternator	3 kW. Alternator	-	-
Valves used See Section J.	3 MT23B 2 NU22C	1 MT1 1 NU1	2 MT23B 2 NU22C	-	-
Wave form.	C.W. and I.C.W.	C.W. and I.C.W.	I.C.W.	Spark	Spark
Associated wavemeters.	Patt.1492B or G9	Patt.1492B or G9	G7 & G8	Patt.1492B or G9	Patt.1492B or G9
Approximate range in miles.	1500	100	World wide at times.	150	50
Date of Design.	1921	1924	1927	1930	1928
Reference page.	RE9	RE11	RE10	OB6	OB2

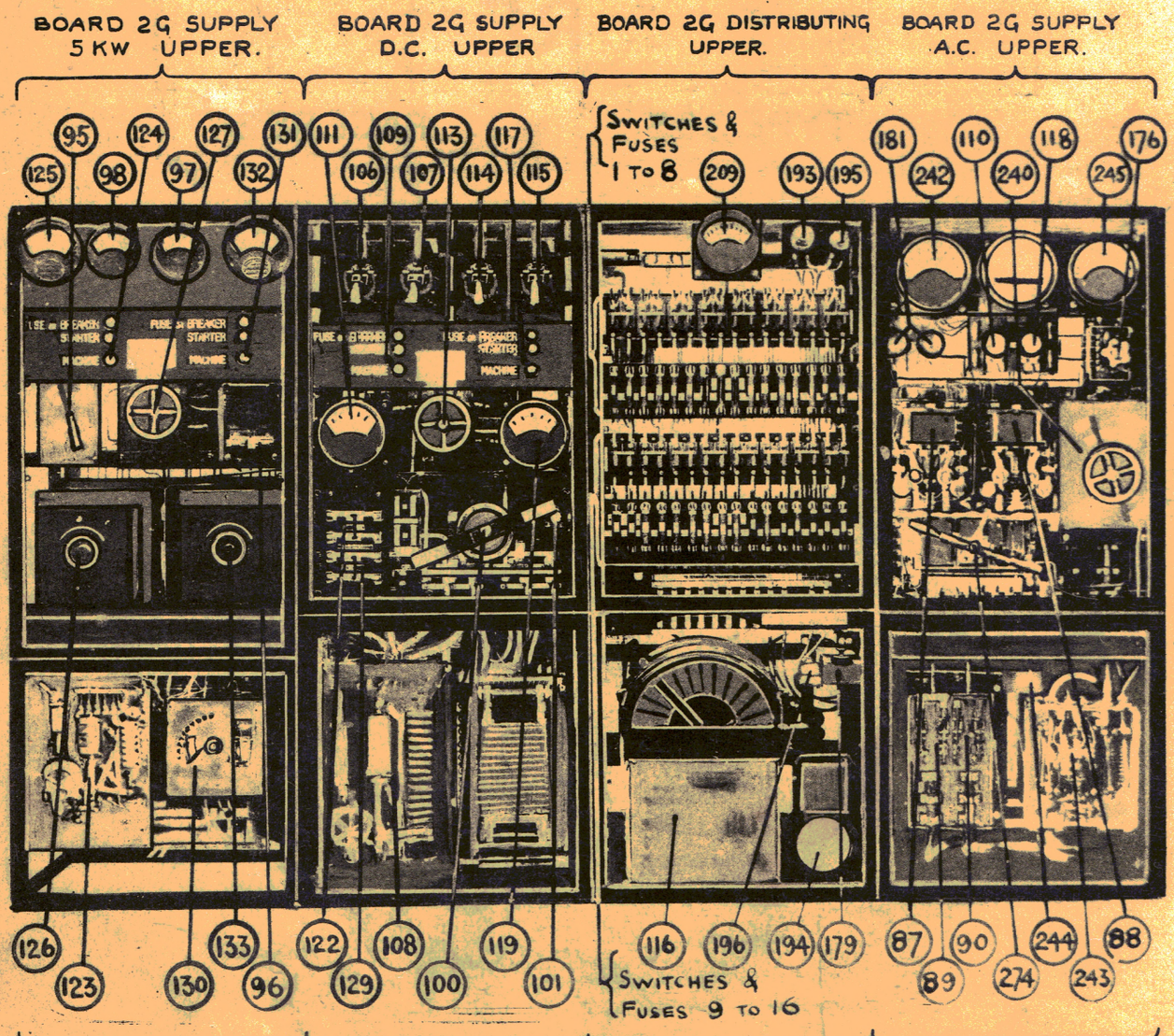

FIG. A.

COMPOSITION OF PANELS.

Type 36S is the present main transmitting set of heavy ships and modern cruisers. It is being replaced by Type 48. Type 36S has four power boards, which carry the necessary switches, fuses and instruments for the distribution of power to the set and W/T office. A photograph of these boards is shown in figure a. Their full title (which must be used for store keeping purposes) is considered too cumbersome for instructional purposes and they will be referred to as Nos. 1, 2, 3 and 4 power boards in these notes, as shown below.

No. 1.	No. 2.	No. 3.	No. 4.
Board 2G Supply, 5 kW Upper.	Board 2G Supply D.C. Upper	Board 2G Distributing Upper	Board 2G Supply A.C. Upper
Board 2G Supply, 5 kW Lower	Board 2G Supply D.C. Lower	Board 2G Distributing Lower	Board 2G Supply A.C. Lower

The transmitting circuits of Type 36S are carried in five valve panels, which face the power boards. Their storekeeping titles are shown below, as well as the name by which the various panels will be referred to in these notes. The spark attachment, Transmitter 6G, is built into the space formerly completely occupied by the smoothing condensers, which have now been redesigned to occupy a smaller space in the same panel. Photographs of these panels are shown in figures y and z. The emergency set, Transmitter 6D, is fitted inside the cage.

Transmitter 3G Low Power	Transmitter 3G. H/F	Transmitter 3G. I/F	Rectifying Panel	Transmitter 6G
Panel 3GL Upper	Panel 3G Short wave Upper	Panel 3G Transmitting Upper	Panel 3G Rectifying Upper	Panel 3G Spark Upper
Panel 3GL Lower	Panel 3G Short wave Lower	Panel 3G Transmitting Lower	Panel 3G Rectifying Lower	Panel 3G Spark Lower

The switches necessary for the control of the set are mounted in a special panel, Board 2G Controlling, (see figure b.), which is fitted within easy reach of the operator in the C.R.R. The "on" and "off" pushes for the auto-starters are also situated near the operator as are the main alternator field regulators (112) (120) A.C. Voltmeter (241) (See figure e.), also the aerial ammeter (228) and milliammeter (158) (See figure i.)

BOARD 2G CONTROLLING.

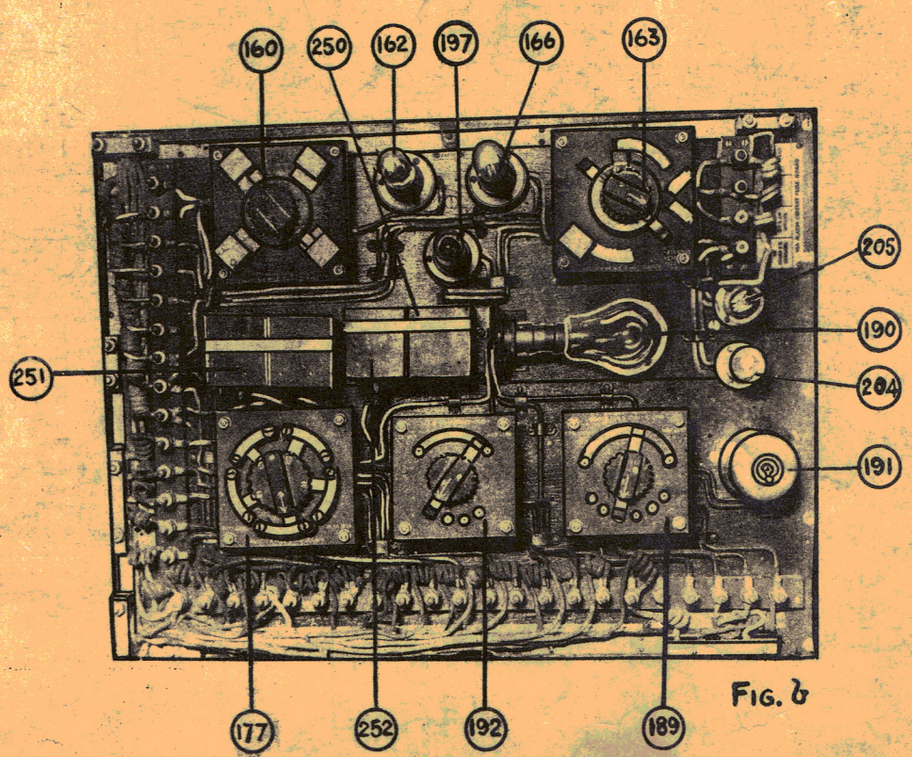

FIG. b

RE4

TYPE 36S

20 KW. SUPPLY.

FIG. 8.

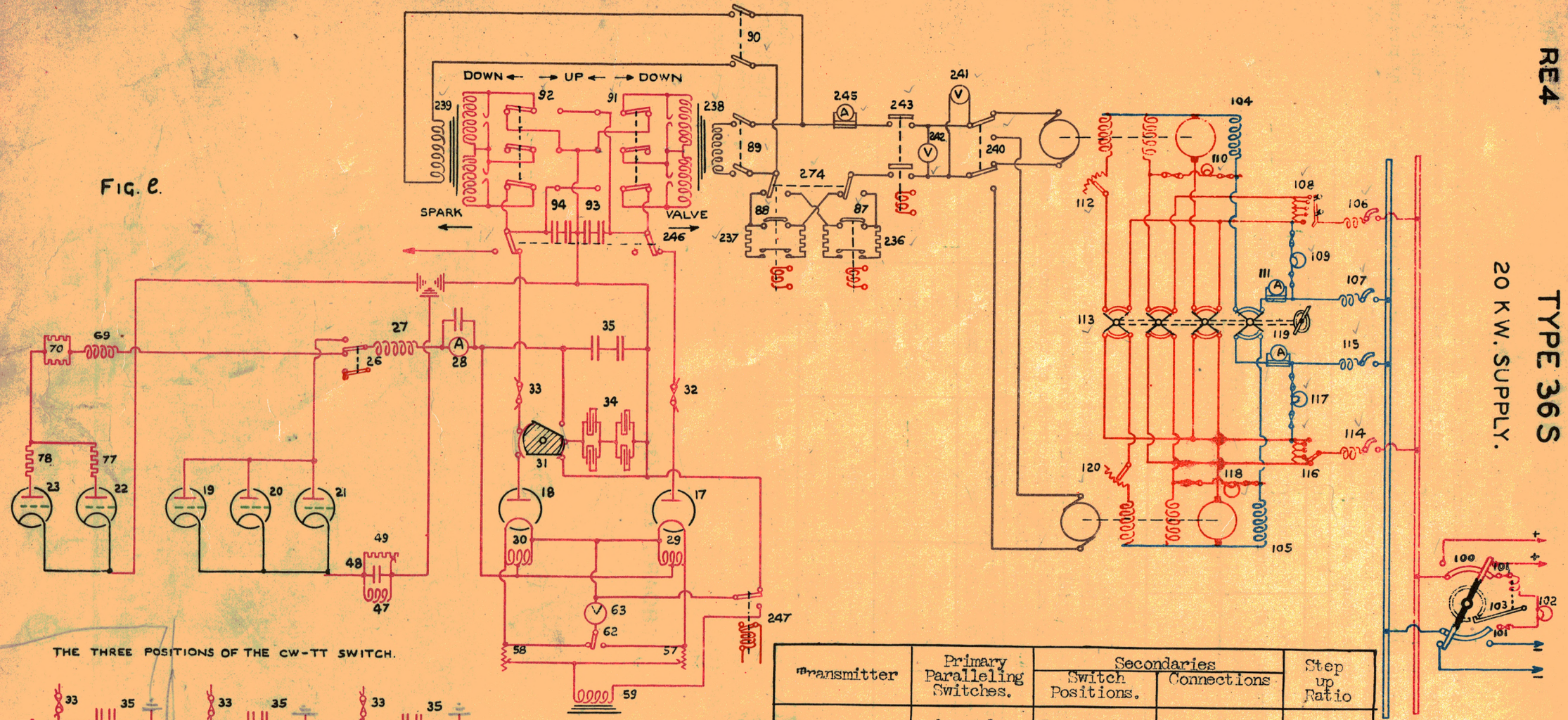

THE THREE POSITIONS OF THE CW-TT SWITCH.

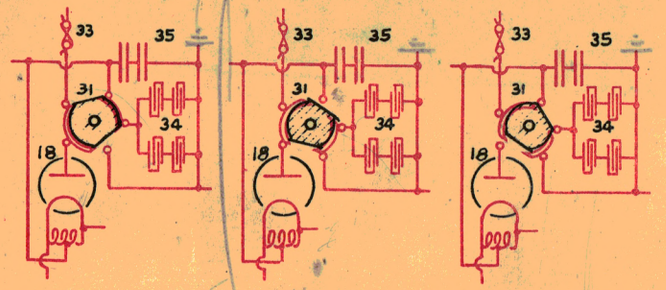

CW. TT DOUBLE PULSE. TT SINGLE PULSE.

The secondary switch of the transformer not in use must always be in the central (or "OFF") position.

Transmitter	Primary Paralleling Switches.	Secondaries		Step up Ratio
		Switch Positions.	Connections	
3C (L/F) or (H/T)	One only made	Transformer in use "UP"	One only	1 - 40
	Both made	Both "DOWN"	SERIES	1 - 80
3C (SPARK)	One only made	Transformer in use "UP"	One only	1 - 40
	Both made	Both "UP"	PARALLEL	1 - 40

20 KW. SUPPLY.

Main Alternators 20 kW. Circuit breakers (106) (107) and (114) (115) connect the main bus bars to the X size automatic starter (108) (See page MA5), and hand starter (116) (See sub-section MB), respectively which control the main alternators for the H.T. supply. The circuit breakers are mechanically set to "ON" by hand and if an excessive current is taken by the alternator break to "OFF" by the action of the bobbin shown diagrammatically in series with the contact. They can also be broken by pressing an "OFF" push. An eight pole change over switch (113) connects the starters (108) (116) to the main alternators and enables either starter to be used for either machine and both machines can be run simultaneously. The motor end of the machines can be completely isolated by setting the C.O.S. (113) to "OFF". Indicating lamps (109) (117) are connected between the armature terminals of the starters and the negative contacts of the circuit breakers. The lamps are situated behind a glass slide which is moved by an arm on the C.O.S. (113) and indicates the combination of Breaker, Starter and Machine in use and "OFF" when the C.O.S. (113) is in the "OFF" position (see figure a.). If an automatic starter (108) is switched on with the C.O.S. in the "OFF" position the indicating lamp (109) or (117) will reach full brilliancy as soon as the starter connects with the first contact as only the 6 ohm starter resistance is in series with it. When the auto-starter (108) is connected to the machine by the C.O.S. (113) and the starter switched "ON" the indicating lamp (109) or (117) will first glow and finally reach full brilliancy when the machine is running at full speed. This effect is due to the indicating lamp being connected in parallel with the motor armature, the effective resistance of which increases as the motor gathers speed and so increases the back E.M.F. The same effect is, of course, obtained with the hand starter (116) in use.

Machine running lamps (110) and (118) are also fitted and are connected between the series and shunt fields of the motor and thus indicate that power is being supplied to the alternators.

The alternator field regulators (112) (120) and an A.C. voltmeter (241) are fitted in the C.R.R. to enable the operator to control the power without leaving the receiving room. Motor field regulators and frequency meters which were fitted with the earlier machines are not now used as the later machines are of the 500 cycles/sec constant speed type.

Main A.C. Supply. The main A.C. output is connected to the main A.C. C.O.S. (240). As this switch is separate from the machine C.O.S. (113) care should be taken that it is set to the machine in use. The centre contacts of the main A.C. C.O.S. (240) are connected to the relay switch (243) which is a double pole switch in the main A.C. supply to the set, and which is operated by a gate switch (173) (see figure q.) on the cage door when the D.C. switch (12) is made. If a hot wire ammeter (245) is used its shunt is fitted in the relay switch box but the later type moving iron instruments have no shunts (See Admiralty Handbook of W/T (1931) paragraph 188). Two paralleling switches (89) (90) isolate either transformer primary in case of failure or connect the primaries in parallel for normal working. The main A.C. circuit is completed by the magnetic keys (87) and (88) either of which can be used by setting the change over switch (274) to the magnetic key required. Double contacts are fitted in the magnetic keys with non inductive resistances (236) (237) connected across each side (See page ~~B5~~ B5.7). The auxiliary contacts are adjusted to make before the main contacts and complete the A.C. supply through the resistances. The final movement of the key makes the main contacts and short circuits the resistances. With this arrangement sparking at the magnetic key contacts is considerably reduced.

H.T. Supply. Two transformers (238) (239) with a step up ratio of 1 - 40 are used for the H.T. Supply. Series - Parallel switches (91) and (92) are fitted in the secondaries and, in conjunction with the primary paralleling switches (89) (90) can be set to the positions shown in the table, opposite.

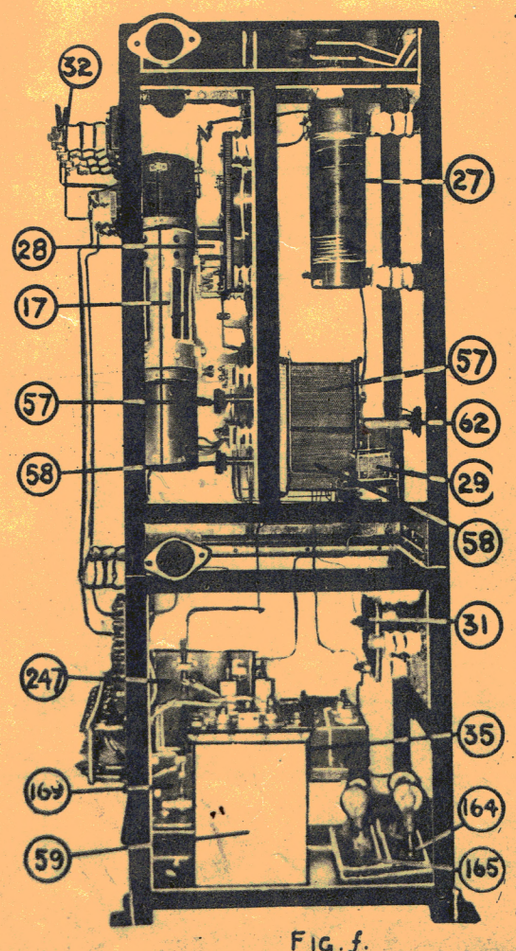

FIG. f.

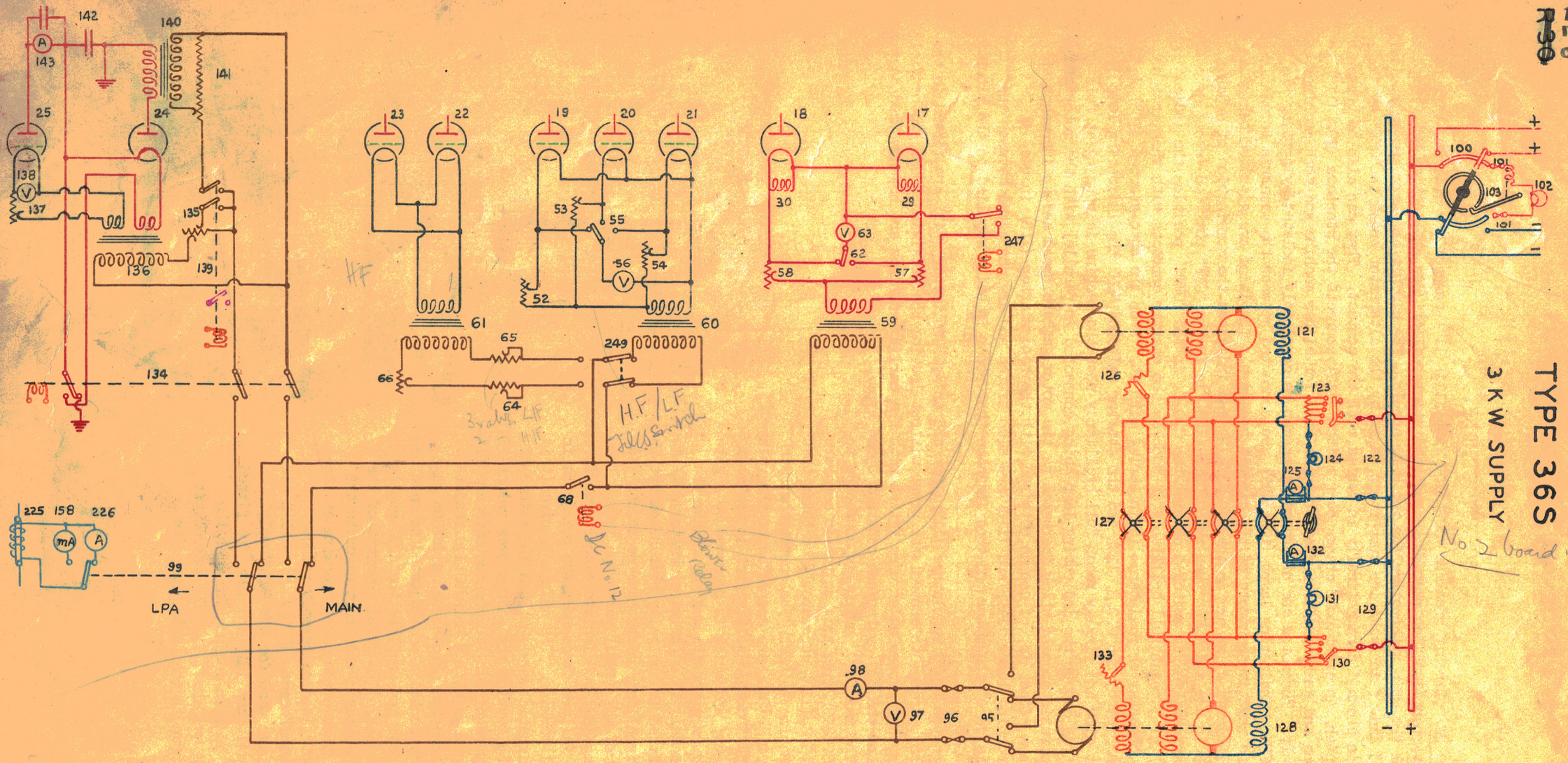

FIG. 9

TYPE 36 S

20 KW. SUPPLY (CONTINUED).

When in the "SERIES" position with both switches "Down" the transformer secondaries are connected to earth by the secondary switches (91) (92) at the ends which are joined. In the "PARALLEL" positions with the switches "Up" the centre points of the secondaries are earthed. An interlocking device prevents one transformer secondary being switched to "SERIES" position while the other is to "PARALLEL" position as such a combination would probably cause considerable damage to the transformer windings through the earth connections. Each secondary is protected from stray oscillatory currents by two 1-jar condensers in series (93) (94) and safety horns are connected across each half of the secondary windings.

The H.T. supply can be connected to the main rectifying valves (17) (18) or Spark Attachment AG by the "Valve - Spark" switch (246). In the "Spark" position this switch isolates the main rectifying valves and connects one side of the series-parallel switches (91) (92), to the Spark attachment. In the "Valve" position the series-parallel switches (91) (92) are connected to two fuses across safety horns one of which (32) is connected to the anode of one of the rectifying valves (17) and the other (33) to the C.W.-T.T switch (31).

This switch has three positions (see inset to figure e):-

C.W. Both rectifying valves (17) (18) and the smoothing condensers (34) connected to the H.T. supply.

T.T. Double Pulse (1000 cycles/sec) Both rectifying valves connected to the H.T. supply. Smoothing condensers disconnected and earthed.

T.T. Single Pulse (500 cycles/sec) One rectifying valve (17) only connected to the H.T. supply. Smoothing condensers disconnected, but not earthed.

Two 1-jar condensers (35) connected in series protect the rectifying valves filament transformer (59) from stray oscillatory currents when using L.C.W. (See Admiralty Handbook of W/T (1931) paragraph 356 (22)).

High peak oscillatory voltages are obtained when using tonic train and may cause sparking in the set if the A.C. volts are high. (See Admiralty Handbook of W/T (1931) paragraph 354). The A.C. input, therefore, should not exceed 250 volts when using T.T. at 500 cycles/sec and 300 volts when using T.T. at 1000 cycles/sec.

Equaliser coils (29) (30) connect the filaments of the rectifying valves to the anode ammeter (28) L/F anode choke coil (27) and anode C.O.S. (26). The anode C.O.S. (26) connects the H.T. supply to the L/F or the H/F set and has an additional contact which short circuits the operating switch (228) etc., when in the H/F position as described later (figure s.).

3 KW. SUPPLY.

Filament Alternators 3 kW. Two pairs of fuses (122) and (129) connect the main bus bars to the Z size automatic starter (123) (See page MA9) and hand starter (130) (see subsection MB) respectively which control the 3 kW alternators for the filament supply to all valves and the H.T. and filament supply for the Low Power Attachment. The fuses (122) (129) correspond to the circuit breakers (106) (107) (114) (115) in the 20 kW main alternators supply.

An eight pole change over switch (127) connects the starters (123) and (130) to the filament alternators and carries out the same functions as the C.O.S. (113) used for the main alternators. Indicating lamps (124) (131) indicate the combination of Fuses, Starter and Machine in use and are operated in a similar manner to those for the main alternators but no "Machine Running" lamps are fitted. The alternator field regulators (126) (133) and an A.C. voltmeter (97) are fitted in the power board near the set to enable the operator to adjust the A.C. voltage while observing the actual voltage on the valves by the voltmeters (56) (63) in the valve panels.

Filament A.C. Supply. The A.C. output from the filament alternators is connected to the filament A.C. C.O.S. (95). As this switch is separate from the machine C.O.S. (127) care should be taken, as in the case of the 20 kW machines, that it is set to the machine in use. Fuses (96) and an ammeter (98) connect the A.C. C.O.S. (95) to the "Main-L.P.A." C.O.S. (99) on the Low Power Panel. This switch (99) has two positions:

MAIN. In this position the A.C. filament supply is connected through the main filament switch (88) to the L/F - H/F C.O.S. (249) and the rectifying valves filament transformer (59). An additional contact connects the aerial ammeter transformer (225) to the aerial ammeter (226) in the C.R.R.

L.P.A. In this position the A.C. supply is connected to the L.P.A. filament transformer (136) and H.T. transformer (140) while the additional contact connects the aerial ammeter transformer (225) to a milliammeter (158) in the C.R.R.

The filament switch (88) is a single pole break in the filament A.C. supply which completes the circuit to the rectifying valves filament transformer (59) and to the L/F - H/F C.O.S. (249). The latter connects the supply either to the filament transformer (60) for the L/F valves (19) (20) (21) or the filament transformer (61) for the H/F valves (22) (23). The filaments of the rectifying valves are connected to the H.T. supply for the transmitting valves. The secondary windings of the rectifying valves transformer (59) are therefore highly insulated from earth. A rectifying switch (247) is fitted in the secondary circuit which, when made, completes the filament supply and, when broken, earths the filaments and thus the smoothing condensers (34) through the equaliser coils (29) (30), when using C.W. As the filament transformers step down the voltage (and increase the current) and the filament switch (88) is fitted in the primary circuit of the filament transformers whilst the rectifying

RE 8
~~RS2~~

TYPE 36 S

3 KW. SUPPLY (CONTINUED).

Switch (247) is in the secondary circuit of the rectifying valves filament transformer (59) the rectifying switch carries a greater current than the filament switch. The rectifying switch is therefore arranged to "Make" before and "Break" after the filament switch as described later. By this means the rectifying valves transformer (59) is disconnected from the A.C. supply by the filament switch (68) before the rectifying switch breaks and so prevents arcing at the contacts of the rectifying switch (247). The filament rheostats (57) (58) for the rectifying valves are fitted with handles at the rear of the set and should only be adjusted when the main A.C. supply is broken or the main alternators stopped. A voltmeter (63) with a C.O.S. (62) is fitted in the rectifying panel to indicate the filament voltage.

When the L/F - H/F C.O.S. (249) is set to H/F, the A.C. supply is connected to the H/F transmitting valves transformer (61) through two semi-adjustable resistances (64) (65) and a rheostat (66). The two resistances (64) (65) are inserted to compensate for the difference in load when changing from L/F (three valves) to H/F (two valves) or vice versa. By a judicious setting of these resistances it is possible to switch from one set to the other without altering the adjustment of the filament alternator field regulators (126) (133).

TRANSMITTER 3G, L/F.

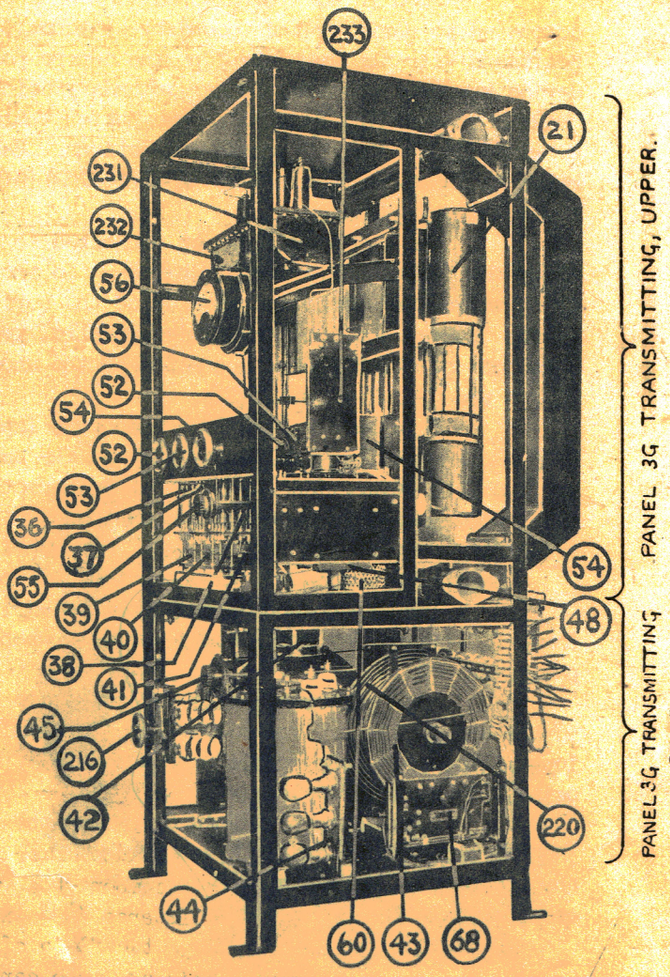

FIG. h.

TRANSMITTER 3G, L/F.

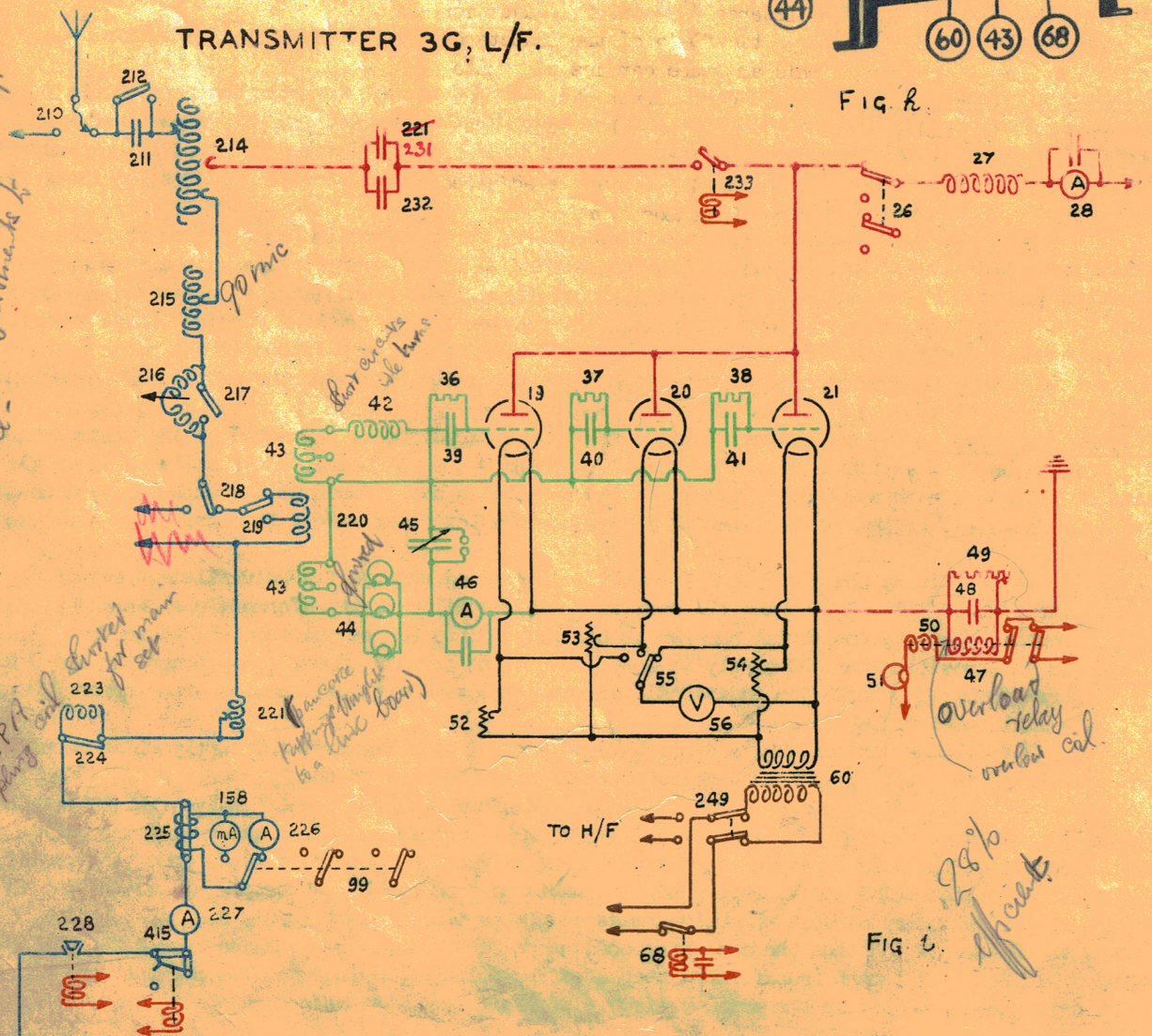

FIG. i.

TYPE 36 S

TRANSMITTER 3G, L/F.

Wave form	Method of producing oscillation	Nature of circuit	Grid excitation	Feed	Aerial excitation	High oscillating potential electrode.
C.W. or I.C.W.	Self	Tuned circuit between anode and filament.	Mutual inductive	Parallel	Direct inductive	Anode

Reference:- Admiralty Handbook of W/T (1931) paragraph 856.

The main L/F transmitting circuit fitted in Type 36S is referred to herein as Transmitter 3G, L/F. Most of the components are housed in Panels 3G, Transmitter, Upper and Lower, but some are in other panels or positions as indicated in the photographs.

The H.T. supply is connected to the valves by the H.T. change over switch(26) which is hand operated from the front of the panel and has an additional contact to carry out the functions described in the notes on D.C.Switch (14) (figure s.).

Each valve has a 32,000 ohm grid leak (36) (37) or (38) and 4 jar condenser (39) (40) or (41) connected between the grid and the grid circuit. The grid tuning coil (43) is wound on four pancake formers two of which are fixed on each side of the aerial coupling coil (220). Nine tappings from the grid coils are connected to a terminal board at the rear of the set and six leads are connected from the terminals required to the grid wave change linkboard (254) (see figure y.) The turns of the grid coil (43) not in use are short circuited by the 850 mic coil (42). This prevents the idle turns from forming a circuit in resonance with the turns in use and setting up high voltages which would damage the grid coils. The grid tuning condenser(45) is adjusted from the front of the valve panel and is protected from damage by sparking by a small spark gap. Three resistance lamps (44) are connected in the grid oscillatory circuit to reduce the current and to indicate when the grid oscillatory current is correct. The lamps should not burn at more than half brilliancy. A grid ammeter (46) indicates the grid current from grid to filament.

The filaments of the valves are connected to earth through the overload relay which consists of an inductance coil (47) condenser (48) and adjustable resistance (49) in parallel. The condenser (48) passes the R/F component of the valve current. The D.C. component passes through the inductance coil (47) and resistance (49) and the adjustment of the latter varies the proportion taken by the former. The magnetic field of the inductance coil(47) acts upon an armature against the tension of a spring. This armature carries two contacts and when attracted over against the spring, by virtue of the amplitude of current in the inductance coil(47), one contact completes the circuit of the hold on coil(50) while the other contact short circuits the supply to the bobbin of the main filament switch(68) thus switching off the valves. (See figure t.) Once the adjustment of the spring is fixed the resistance (49) should be adjusted so that the overload will operate when the anode current (indicated by the anode ammeter(28)) reaches 1.2 amps.

The valves have separate filament rheostats (52) (53) (54) and a voltmeter(56) can be switched to any valve by the voltmeter C.O.S. (55) to ensure that the correct voltage is applied to each valve filament. The transmitting valves filament transformers for L/F or H/F are connected to the A.C. supply by the L/F - H/F filament C.O.S. (249) which is fitted at the rear of the H/F panel. (See figure y.)

The aerial circuit consists of an aerial series condenser (211) main aerial coil(214), 90 mic coil (215) variometer(216) aerial coupling coil (220), fine tuning coil (221), link(224), aerial ammeter transformer (225), aerial ammeter(227), emergency link (415) and operating switch(228). The aerial series condenser(211) is brought into use for the higher frequencies by opening the short circuiting link(212). Tappings for rough tuning from the upper and lower ends of the main aerial coil(214) are taken to the upper(275) and lower(277) link of the main wave change linkboard and the anode tapping leads are connected to the middle row of links (276) (See figure u.). Finer tuning is obtained by tappings on the 90 mic coil (215) which has a separate linkboard (222) (See figure y.). The variometer(216) can be short circuited by a link(217) for frequencies above about 185 kc/s and is adjustable by a handle at the front of the valve panels. A locking device on the handle can be used to limit the movement of the handle to suit the frequency in use. A link (219) connects either half or the whole of the aerial coupling coil (220) in use as required. The fine tuning coil(221) consists of a flat spiral coil and is connected by six leads to the fine tuning linkboard(253). The aerial ammeter transformer(225) is connected to aerial ammeter (226) for the main set by the Main - L.P.A. C.O.S. (99).

Tuning. The set is tuned by placing the wavemeter mutal coil near the main aerial coil (214) or 90 mic coil (215) and adjusting the tappings on each of the tuning coils until the desired frequency is obtained. At each adjustment of inductance in the aerial circuit the grid circuit should be readjusted and the anode tapping connected to that pint in the aerial circuit which gives the maximum aerial current with the minimum anode current. The former is shown on the aerial ammeters (226) and (227) and the latter on the anode ammeter(28)

The theory of the adjustment of the anode tapping point is fully dealt with in Admiralty Handbook of W/T (1931) paragraph 814.

TYPE 36S
TRANSMITTER 3G, H/F.

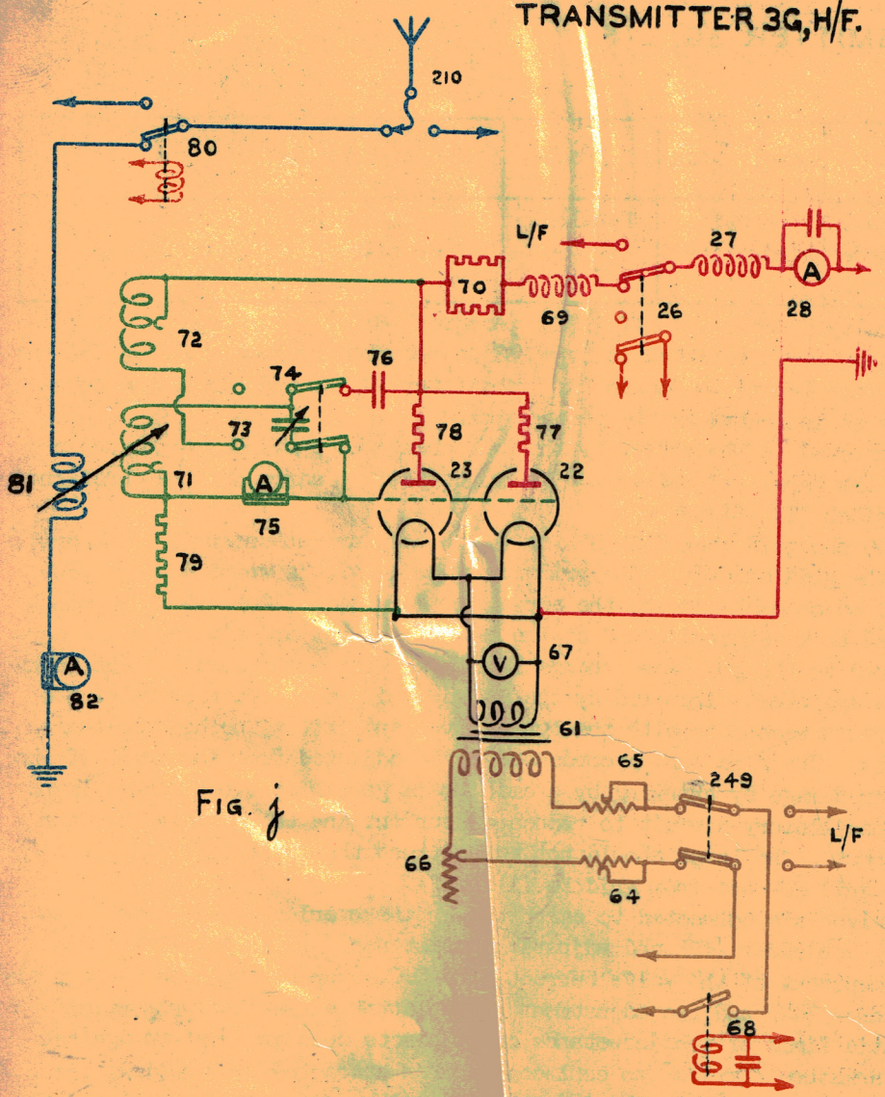

FIG. j

EQUIVALENT CIRCUITS

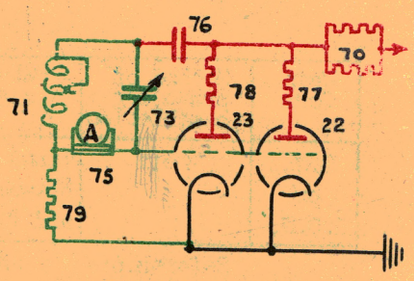

PARALLEL POSITION
FREQUENCY RANGE
4160 — 10000 kc/s

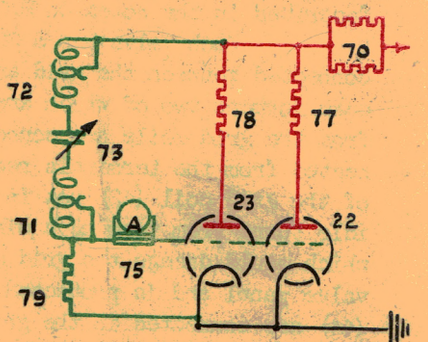

SERIES POSITION
FREQUENCY RANGE
10000 — 17090 kc/s.

FIG. k.

In certain ships, when in the paralel position on a wave of 7800 kc/s there is a frequency jump to 18000-20000 kc/s. This undesired oscillation was set up round circuit consisting of a valve capacity, the anode blocking condenser (76), the tuning condenser (73) and the inductance of the leads. It has been found that by shortening the leads and by connecting the grid of the valves direct to the common bar of the series-parallel switch (74), the frequency at which "jump" occurs has been adjusted so as not to affect the performance when the set is in the "parallel" position.

Further, to increase stability the grid leak (79) is connected to the lower end of the primary coil (71).

The set, when in the "parallel" position, will now tune accurately up to a frequency of about 7200 kc/s, after which the "series" position must be used. The minimum frequency, when in the "series" position, is about 6400 kc/s., so that there is ample overlap. Changing over to the "series" position will vary in different ships, but should take place at about 7000 kc/s.

When using H/F the voltage regulation of the machines is poor. Therefore the secondaries of the main transformers are to be in the parallel position. (See A.C. 1526/33).

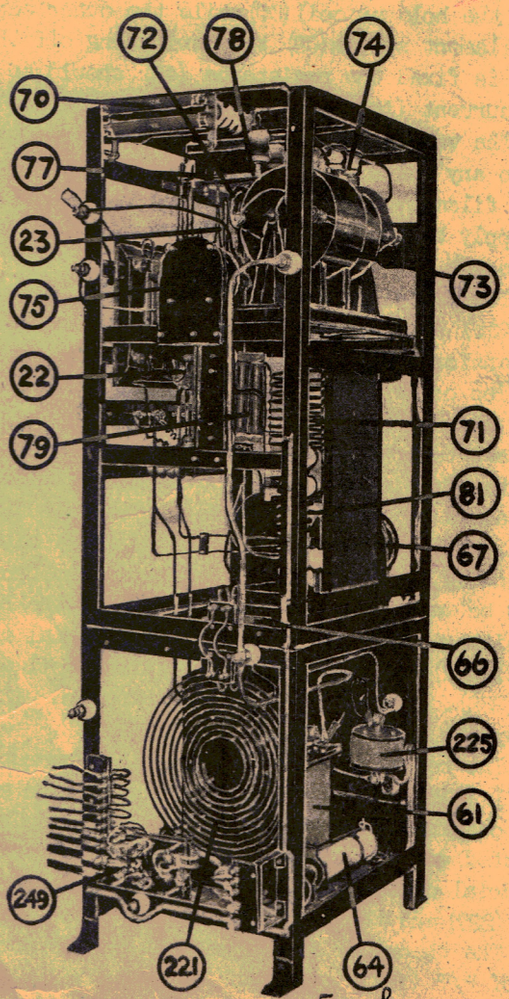

FIG. l.

RE 11
~~R35~~

TYPE 36S

TRANSMITTER 3G, H/F.

Wave form	Method of producing oscillation	Nature of circuit	Grid excitation	Feed	Aerial excitation	High oscillating potential electrode
I.C.W.	Self.	Tuned circuit between anode and grid.	Capacitive	Parallel	Mutual inductive.	Anode

The H/F Transmitting Circuit fitted in Type 36S is referred to herein as Transmitter 3G, H/F. Most of the components are housed in panels 3G short wave, upper and lower, but some are housed in other panels or positions as indicated in the photographs.

The H/F transmitting circuit used in Type 36S is explained in Admiralty Handbook of W/T (1931) paragraph 712. Figures k. are simplified versions of the circuit.

The H.T. supply is connected to the valves (22) (23) by the H.T. change over switch (26) which is hand operated from the front of the panel and has an additional contact to carry out the functions described in the notes on D.C. Switch (14) (See figure s.). An additional anode choke coil (69) with turns widely spaced is used to protect the main anode choke coil (27). Two anode resistances (70) in parallel are connected in series with the anode supply to suppress back oscillations from the H/F oscillatory circuit.

The filament transformer (61) is connected to the A.C. supply by the I/F - H/F filament C.O.S. (249). The adjustment of the resistances (64) (65) (66) is explained on page ~~228~~ RE8

The oscillatory circuit is connected in the series or parallel position by the change over switch (74). The inductance coils (71) (72) are adjustable by flexible connections and the tuning condenser (73) varied by a handle on the front of the H/F valve panel. An ammeter (75) indicates the current in the oscillatory circuit.

Coupling to the aerial can be varied by adjusting the position of the aerial coupling coil (81). The aerial is connected to the aerial coupling coil (81) by the flexible lead (210) and send-receive switch (80), the latter being operated by a switch on the Board 2G Controlling (see notes on D.C. Switch ~~20~~ 15).

Tuning. The change over switch (74) is set to the appropriate position and adjustments made on the inductance coils (71) and (72) (if the latter is in use). The tuning condenser (73) is then varied until the correct frequency is obtained.

TRANSMITTER 3G, LOW POWER.

Wave form	Method of producing oscillation	Nature of circuit	Grid excitation	Feed	Aerial excitation	High oscillating potential electrode
C.W. and I.C.W.	Self.	Tuned circuit between anode and grid.	Direct	Series	Mutual Inductive	Filament

Transmitter 3G Low Power is the low power attachment fitted with Types 35 and 36 and uses the same aerial circuit as the main set.

A full explanation of the circuit used is given in Admiralty Handbook of W/T (1931), paragraph 630. Figure n. is a simplified diagram of the complete transmitter shown in figure m.

The H.T. and filament supplies are obtained from step up and step down transformers respectively which are both fed from the 3 kW. filament alternator of the main set, the supply being connected to the set by the main - L.P.A. change over switch (99).

An additional contact on the main - L.P.A. switch (99) connects the aerial ammeter transformer (225) to the milliammeter (158) when using the low power set and to the aerial ammeter (226) when using the main set. The milliammeter (158) and aerial ammeter (226) are fitted in the central receiving room.

The H.T. transformer (140) is shunted by a potentiometer (141) for power control. By an arrangement of wires and drums the operator is able to control the power from the C.R.R. The magnetic switch (134) connects the A.C. supply to the filament transformer (136) and the magnetic key (139) and is controlled by a tumbler switch (198) (see figure p) in the C.R.R. An additional contact on the magnetic switch (134) acts as a rectifying switch, by completing the rectifier filament circuit, and earths the smoothing unit (157) when the set is switched off after using C.W.

Three contacts on the magnetic key (139) carry out the following functions -

Upper contact. Makes and breaks the A.C. supply to the H.T. transformer (140) for signalling.

Middle contact. Makes and breaks a short circuit on a portion of the filament resistance (135). This compensates for the drop in filament voltage which would otherwise occur when the H.T. transformer (140) is connected in circuit by the upper contact of the magnetic key.

Lower contact. Makes and breaks the closed oscillatory circuit to prevent damping during reception owing to the tuned oscillatory circuit being coupled to the aerial circuit.

RE12
~~R36~~

TYPE 36S

TRANSMITTER 3G, LOW POWER.

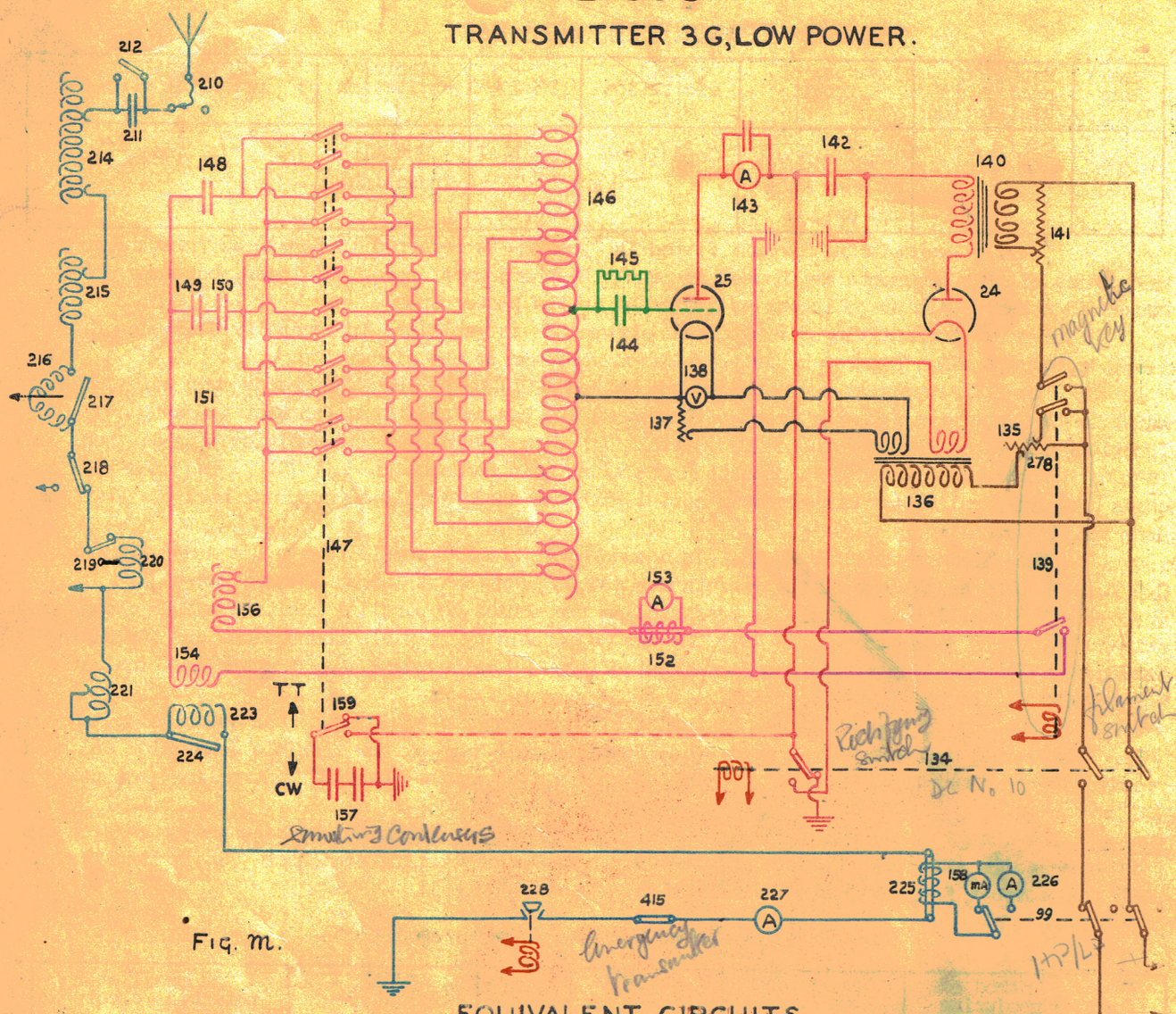

Fig. M.

EQUIVALENT CIRCUITS.

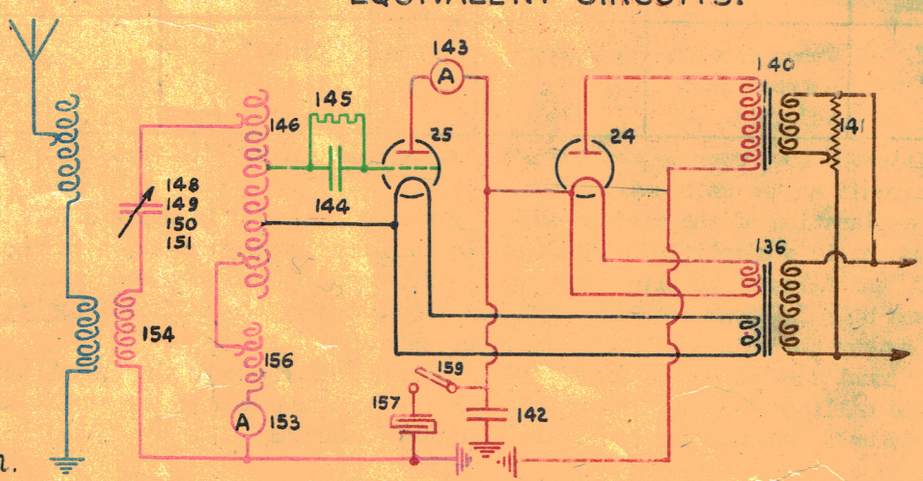

Fig. N.

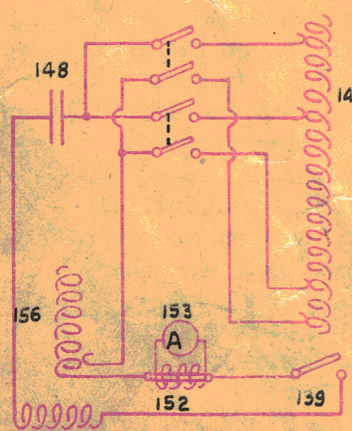

WAVECHANGE SW: (147) POSNS E&F.
CONDENSER (148) 5 JARS.
FREQUENCY RANGE 60-100 kc/s

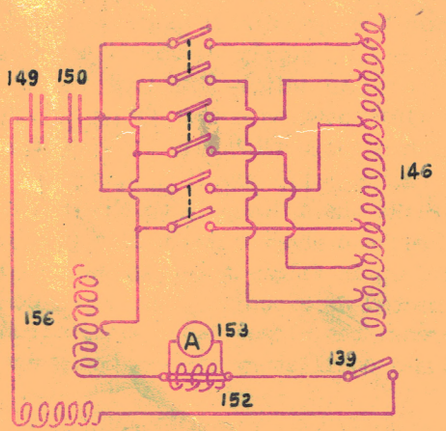

WAVECHANGE SW: (147) POSNS B, C & D.
CONDENSERS (149)(150) [TWO 5 JARS IN SERIES] 2.5 JARS.
FREQUENCY RANGE 100-270 kc/s.

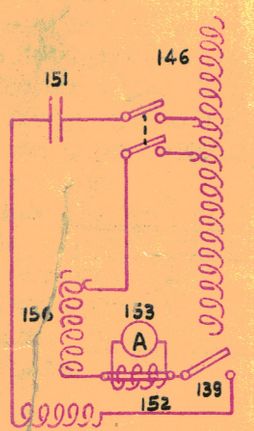

WAVECHANGE SW. (147) POSN A.
CONDENSER (151) 1 JAR.
FREQUENCY RANGE 270-500 kc/s.

TYPE 36S

TRANSMITTER 3G, LOW POWER (CONT.)

The compensating resistance (278) should be adjusted to a position where the reading on the filament voltmeter(138) is not affected by the movement of the magnetic key (139).

The filament rheostat (135) is connected in the primary circuit of the filament transformer(136) which supplies both the rectifying and the transmitting valves. The transmitting valve(25) has a rheostat(137) and a voltmeter (138) in the filament circuit but neither is fitted in the filament circuit of the rectifying valve. The adjustment of the filament voltages should therefore be carried out as follows. A rectifying valve should be selected which requires the same or a slightly higher filament voltage than the transmitting valve with which it is to be used. The transmitting valve rheostat should be set to minimum resistance. The filament voltage is then adjusted to the correct value for the rectifying valve by the rheostat (135). As the voltages across each output winding of the filament transformer are equal the transmitting valve filament voltmeter (138) will indicate the voltage applied to both valves. The voltage on the transmitting valve is then adjusted by the filament rheostat (137) to the correct value, which will be indicated by the voltmeter (138).

The closed oscillatory circuit consists of the main tuning coil (146) four fixed condensers (148)(149)(150)(151) the fine tuning coil (156) the ammeter transformer (152) and the primary coupling coil (154). The grid and filament of the transmitting valve are connected to two terminals on the tuning coil (146), a grid leak resistance (145) and condenser (144) being connected between the grid of the valve and the grid tapping. The grid and filament taps are fixed for convenience, consequently radiation will not be uniform on all frequencies.

The I.C value of the oscillatory circuit can be changed by varying the number of turns in the main tuning coil (146) and by altering the arrangement of the condensers (148) to (151). This is achieved by means of the wave change switch (147) which consists of six pairs of switches, only one pair being closed at a time, the six positions being labelled A to F, as in the case of the link boards. Fine adjustment can be obtained by means of the fine tuning coil (156).

An additional switch contact (159) on the wavechange switch (147) connects the smoothing unit (157) in circuit. The switch contact (159) is operated by studs which can be screwed into position to close the switch on the frequencies on which it is desired to transmit C.W.

The coupling to the aerial circuit is fixed and the aerial coupling coil (223) is short circuited by a link (224) when the main set is in use.

Tuning. The low power set is coupled to the main aerial circuit and is usually tuned to the six frequencies which the main set uses. Six positions of the wavechange switch(147) are made to correspond with the six frequencies used on the main set.

To tune to a particular frequency, set the normal "power" adjustments on the aerial circuit but keep the aerial coupling coil (223) short circuited by the link (224). Couple the wavemeter mutual coil to the tuning coil (146) and vary the upper and lower tapping leads until the tuning is approximately correct. Now couple the set to the aerial circuit by opening the link (224). The aerial circuit will then be detuned by the amount of the inductance of the L.P.A. coupling coil (223).

It is found with this set that, to avoid any possibility of "frequency jump" due to tight coupling (see Admiralty Handbook of W/T(1931) paragraph 632) the aerial circuit must be still further detuned, the consequent loss of signal strength being accepted. This can be conveniently arranged by always using one section more or less than the normal "power" setting on the 90 mic coil (215).

With the aerial circuit thus adjusted, couple the wavemeter mutual coil to the main set aerial coil (214) or 90 mic coil (215) and vary the Low Power fine tuning coil (~~122~~ 156) until the wavemeter indicates the correct frequency.

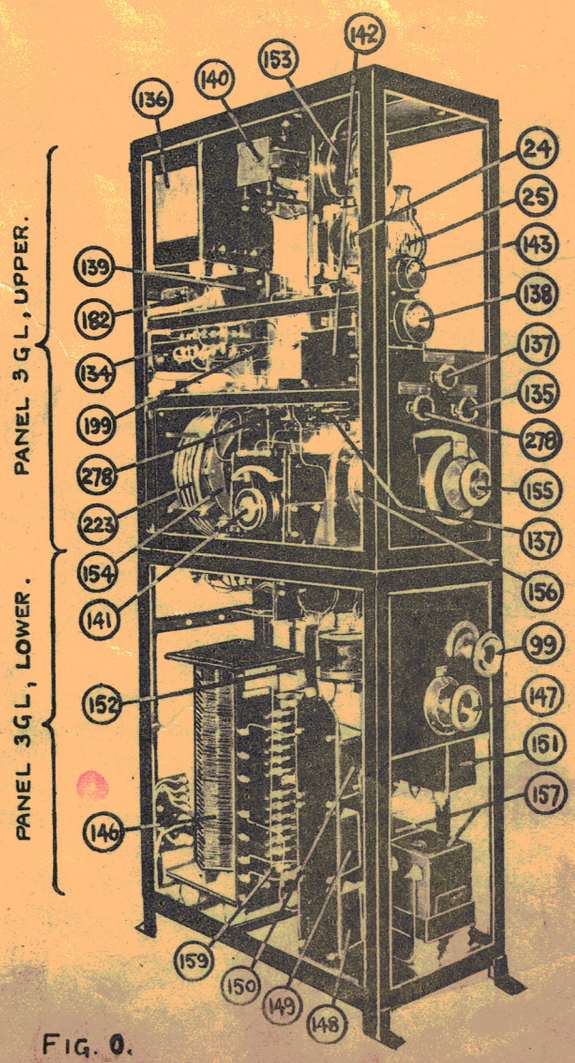

FIG. 0.

RE 14
~~R38~~

TYPE 36S

D.C. AUXILIARY CIRCUITS.

The auxiliary circuits for Type 36S are all controlled by switches, numbered 1 to 13, fitted on No.3 power board.

The duties of the switches are as follows.-

D.C. distributing board

D.C.Switch (1). Lights W/T Office.
D.C.Switch (2). Lights cabinets or receiving room.
D.C.Switch (3). Lights coding office.
D.C.Switch (4). Radiator W/T office.
D.C.Switch (5). Radiator coding office.
D.C.Switch (6). 12½ inch fan.
D.C.Switch (7). Circulator or 7½ inch fan.
D.C.Switch (8). Circulator (small cabinet) or exhaust fan (receiving room).
D.C.Switch (9). Charging board.
D.C.Switch (10). Low power panel safety and control circuit (see figure p.).

D.C.Switch (10) and fuses (~~222~~ 264) supply the bobbin of the magnetic switch (134) in the Transmitter 3G Low Power. The magnetic switch (134) is operated by a tumbler switch (198) in the C.R.R. and a gate switch contact (200). When the gate is opened the magnetic switch (134) breaks the A.C. supply to the H.T. and filament transformers, and the secondary circuit of the rectifying valves filament transformer of the low power set and earths the smoothing condensers (157) thereby making the set safe to handle.

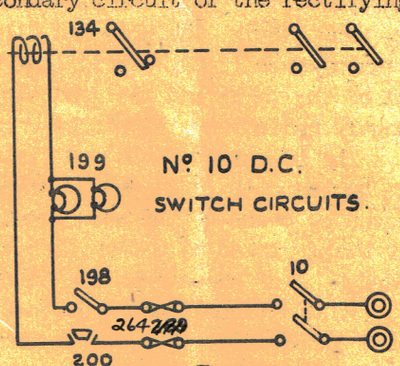

No. 10 D.C. SWITCH CIRCUITS.
FIG. P.

To prevent the set being used when men are working aloft in the vicinity of the aerials or feeders etc., a sliding plate, marked "Man aloft" is fitted to the cover of D.C.Switch (10). The plate can be moved into position to lock the switch (10) in the "OFF" position and thus prevent the set being used.

D.C.Switch (11). Pneumatic Tube Motor.
D.C.Switch (12). Blower and Safety Circuit (see fig.q.)

D.C.Switch (12) and fuses (266), supply the blower motors (171) or (172) the blower relay (169) and the bobbin of the main relay switch (243). When in the "OFF" position the blower relay (169) short circuits the bobbin of the main filament switch (88). (See figure t.). The bobbin of the blower relay (169) is connected in series with the blower motors C.O.S. (170) and will only operate, therefore, when one of the blower motors is switched on. By this arrangement the filament switch (88) can only operate when the short circuit of the blower relay (169) is removed by one of the blower motors being switched on. This prevents the valves lighting without the blower running.

The main relay switch (243) will only close and complete the main A.C. supply to the transformers when the gate switch contact (173) is closed. An additional contact on the relay switch completes the circuit of the safety bell (175) through the gate switch contact (174) if the relay switch should stick "ON" when the gate is opened.

The gate switch contact (174) in the alarm bell circuit is broken when the gate is closed and thus prevents the alarm bell ringing when the relay switch (243) is made and the gate in its normally closed position. A separate pair of fuses (271) on the No.3 power board supplies the alarm bell circuit but no switch is fitted as this might be accidentally left broken and thus render the alarm bell circuit inoperative.

To prevent the set being used when men are working aloft in the vicinity of the aerials or feeders, etc., a sliding plate, marked "Man aloft" is fitted to the cover of D.C.Switch (12). The plate can be moved into position to lock the switch (12) in the "OFF" position and thus prevent the set being used.

D.C.Switch (13). Morse key remote control and bell signal circuit. (See figure r.)

D.C.Switch (13) and fuses (267) supply the bobbins of the master keys (178) and (179) which are operated by the remote control morse keys (183) to (187) fitted in the receiving bays of the C.R.R. Two contacts of the master key C.O.S. (177) connect the bobbins of the master keys in circuit as required. The morse key selector switch (189) connects the morse keys in the receiving bays to the master key in use as required. The remote control office morse key (188) is independent of the selector switch (189) and is connected in circuit by a tumbler switch (191) on the Board 2G Controlling.

The bell and signal circuit is supplied from D.C.Switch (13) and provides a means of communication between the operator in the C.R.R. and the operator making adjustments to the transmitter. A bell (194) and two lamps (193) and (195) marked "START UP" and "SWITCH OFF" respectively are fitted in the power boards. The bell is used to attract the outside operator's attention and the lamps indicate the receiving operator's requirements. The lamps and bell are controlled by the signalling switch (192) on the Board 2G Controlling. A reply lamp (197) on the control board is operated by a push switch (196) on the power board to enable the outside operator to signal to the receiving operator when adjustments to the set have been made. (See also figures a. and b.).

RE 15
~~R39~~

TYPE 36S

D.C. AUXILIARY CIRCUITS.

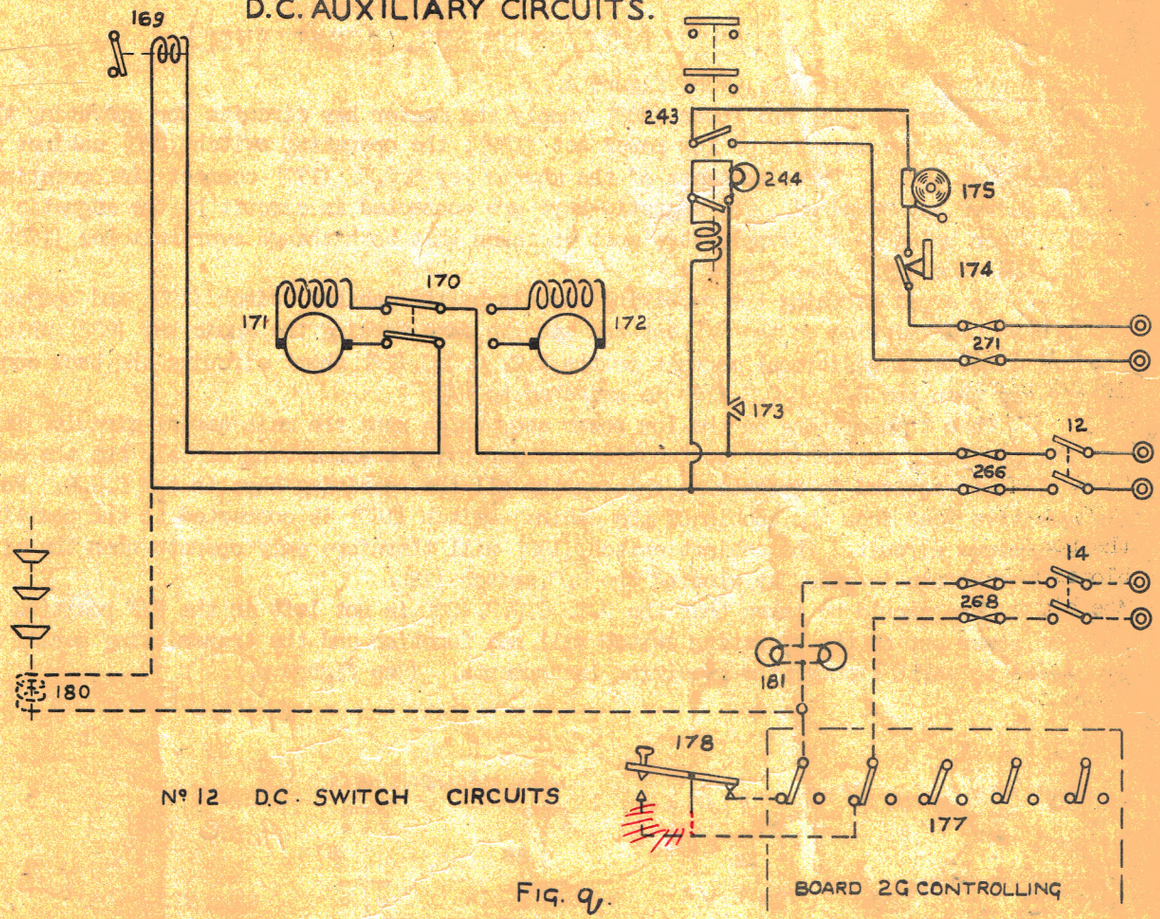

Nº 12 D.C. SWITCH CIRCUITS

Fig. 9.

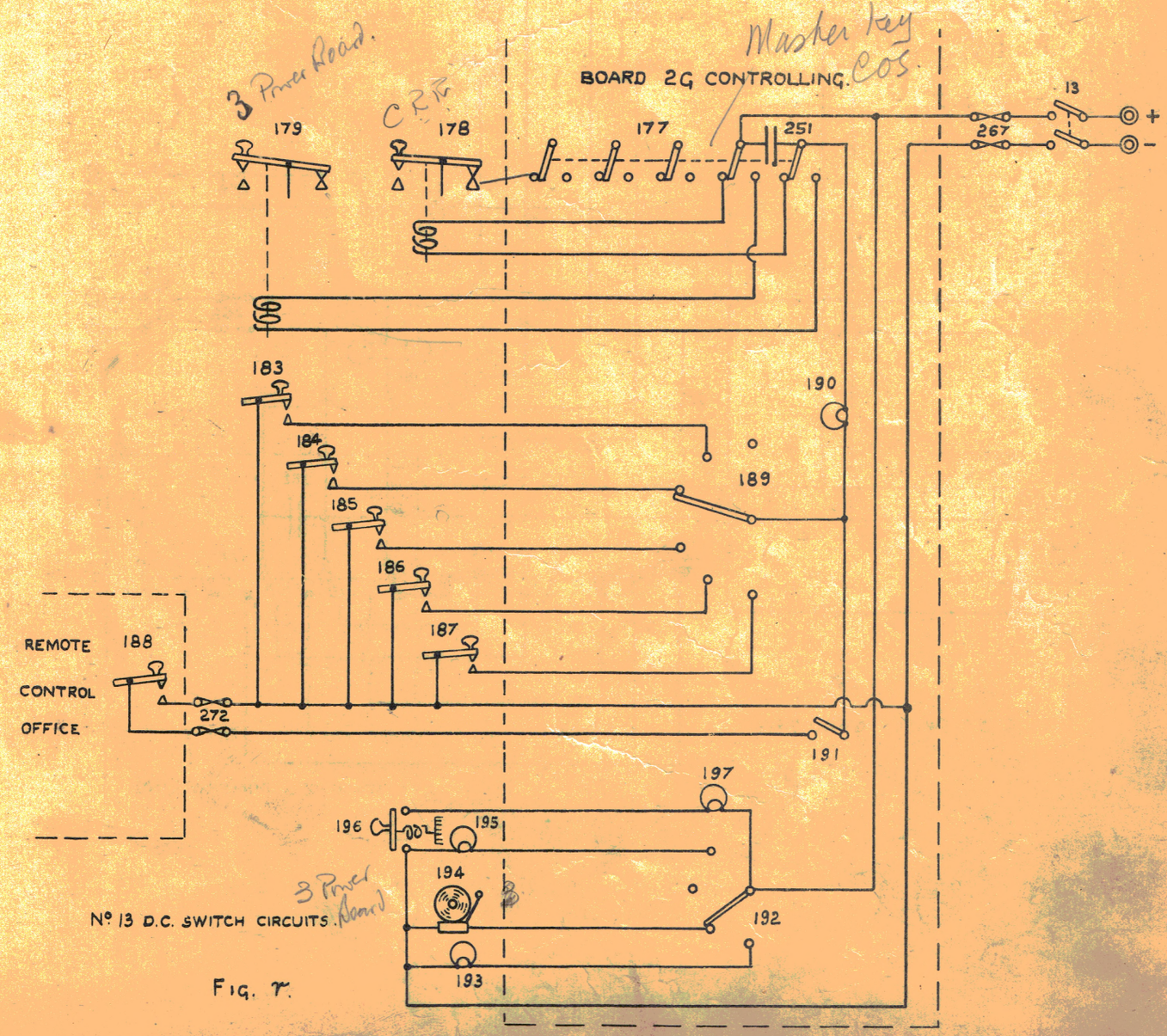

Nº 13 D.C. SWITCH CIRCUITS.

Fig. 10.

RE 16
~~R40~~

TYPE 36S

D.C. AUXILIARY CIRCUITS. (CONTINUED).

D.C. Switch (14) Key circuit. (See figure s.)

D.C. switch (14) and fuses (268) supply the master key circuits for operating the magnetic key (87) (88) of the main set or low power set (139), the operating switch (228) cabinet switch (180) and anode key (233). Three contacts of the master key C.O.S. (177) connect the operating circuits to the master key required. The magnetic keys are connected in circuit by the magnetic key C.O.S. (176). When using 20 KW. supply care must be taken that both change over switches (178) and (274) are to the same key. (See figure x.)

To avoid earthing the receiving aerials by the cabinet switch (180) and operating switch (228) when transmitting on the H/F set and also, to save working the anode key (233) which is not in the H/F circuit, an additional contact on the H.T. C.O.S. (26) short circuits the back contacts of the master key when the H.T. C.O.S. (26) is switched to H/F.

When transmitting on the low power set, which uses the main aerial circuit, it is necessary for the operating switch (228) to function and earth the transmitting aerial, but the cabinet switch (180) is not required to operate as this earths all the receiving bays in the C.R.R. For this reason the positive lead from the bobbin of the cabinet switch (180) is connected to the positive of the blower motors circuit. The cabinet switch (180) will therefore only operate when the circuit for the blower motors is made, by closing the D.C. switch (12).

Care should be taken that the H.T. C.O.S. (26) is not left in the H/F position when using the low power set as the operating switch will not function and the transmitting aerial will be connected to earth through the receiving instruments. (See figure w.).

H.F. & L.F. short circuits.
Operating switch,
Cabinet switch
Anode Key

Operating switch
worked on L.P.

C.O.S. on Power board.

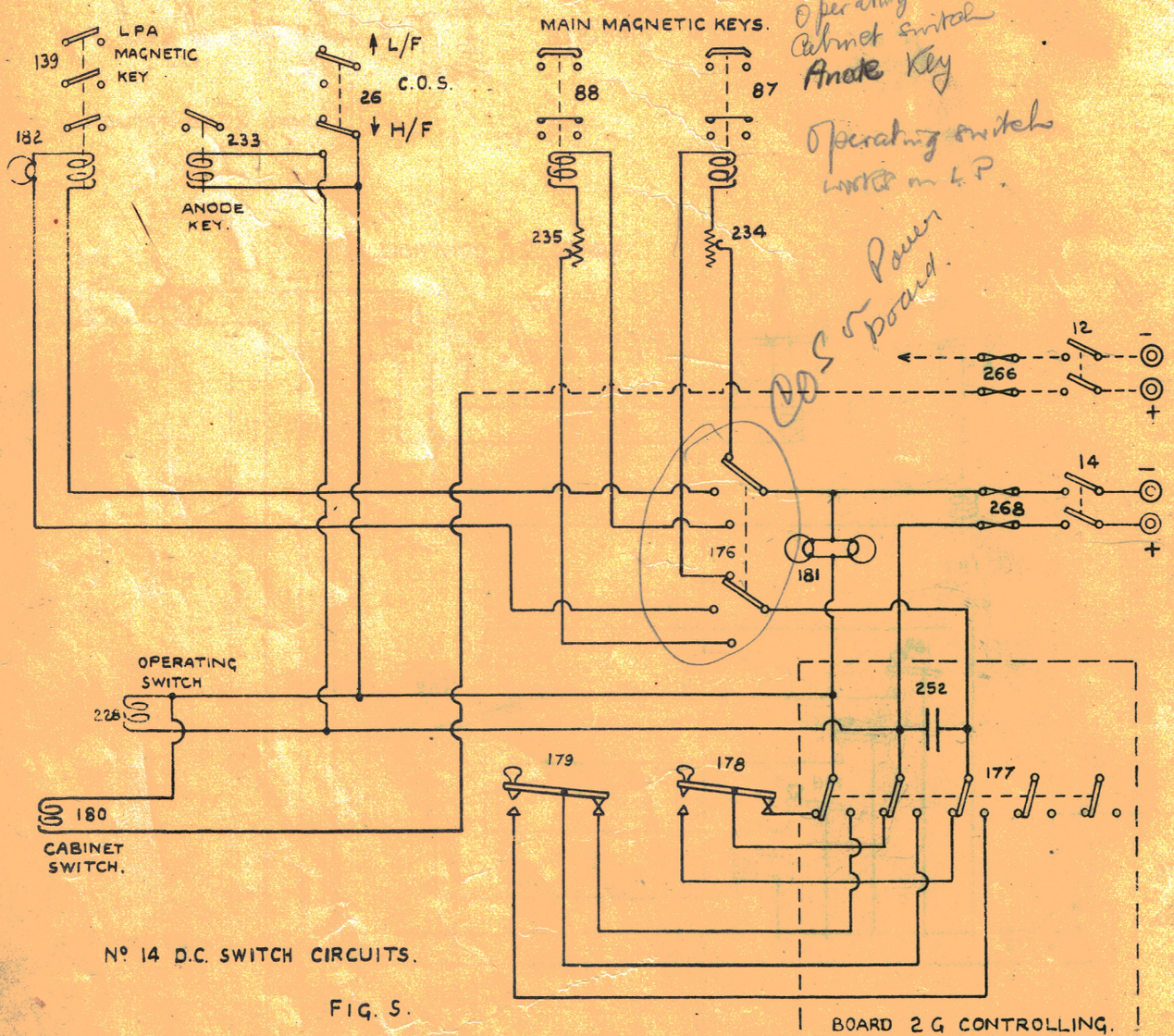

Nº 14 D.C. SWITCH CIRCUITS.

FIG. 5.

D.C. AUXILIARY CIRCUITS. (CONTINUED).

D.C. Switch (15) Control panel Valve set. (See figure t.)

D.C. switch (15) and fuses (269) supply the bobbins of the filament switch (68) rectifying switch (247) overload relay hold on coil (50) and the H/F send-receive switch (80).

The filament (68) and rectifying (247) switches are controlled by the filament control switch (163) on the Board 2G Controlling. The contacts of the filament control switch (163) are arranged to make the rectifying switch (247) before the filament switch (68) and to break them in the reverse order. By this arrangement the A.C. supply to the primaries of the step down filament transformers (59) and (60) or (61) is broken by the filament switch (68) before the secondary circuit of the rectifying valve filament transformer (59) is broken by the rectifying switch (247). Arcing at the contacts of the rectifying switch, due to the large filament current, is therefore prevented.

A 2½ c.p. indicating lamp (166), fitted on the Board 2G Controlling, is connected in parallel with the two 50 c.p. resistance lamps (165) for the filament switch bobbin. The indicating lamp (166) burns at half brilliancy when the filament switch (68) is "ON" but will burn at full brilliancy if the resistance of the filament switch bobbin is short circuited either by the blower relay (169) or the overload relay (50). The operator can ascertain whether the blower relay (169) or the overload relay (50) has operated by breaking the filament control switch (163) and making it again. If the indicating lamp (166) continues to burn at full brilliancy the blower relay (169) has operated. If the indicating lamp (166) returns to half brilliancy the short circuit on the filament switch bobbin was caused by the overload relay (50). The full action of the overload relay is explained on page ~~R38.~~ RE9

As the overload relay is not used with the H/F set the indicating lamp (166) will be operated by the blower relay (169) only when using H/F.

Auxiliary contacts, insulated from the main contacts, are fitted to the filament control switch (163) and the H/F send-receive control switch (160) for the 20 volt warning circuit, which is explained on page ~~R49.~~ RE 18

D.C. Switch (16) (Spare switch).

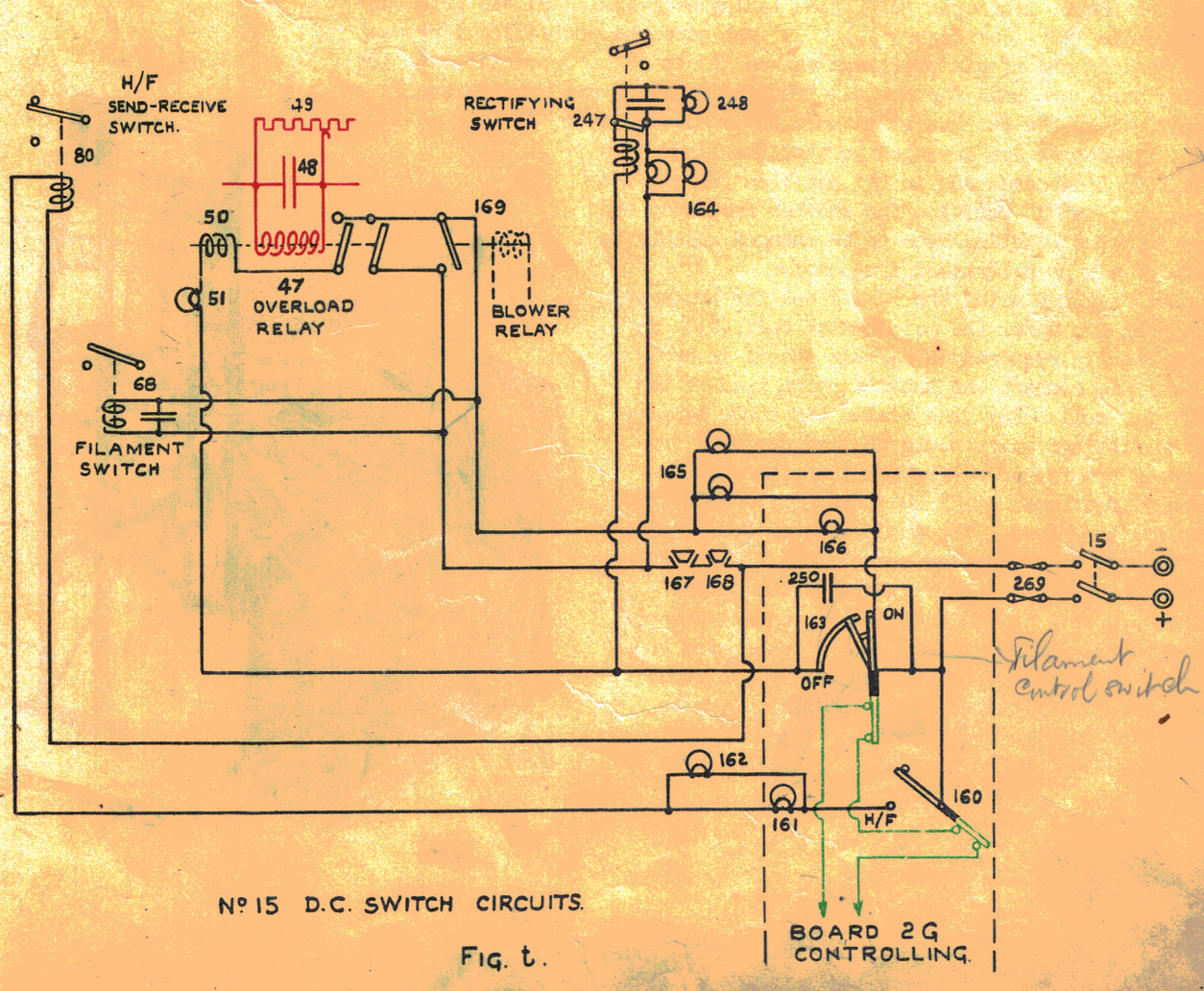

Nº 15 D.C. SWITCH CIRCUITS.

Fig. t.

RE 18
R42

TYPE 36S

20 VOLT WARNING CIRCUIT.

In order to protect the receiving gear in the D/F and Second offices when the main set is transmitting a warning circuit is fitted which consists of loud sounding buzzers (202) (206) and lamps (203) (207) operated by the 20 volt supply from the Board 2G Charging.

The D/F and Second offices are fitted with aerial safety switches (601) and (208) for earthing the aerials when the main set is transmitting or the office is not in use. In the "receive" position the switches (601) (208) are connected as shown in figure v, and complete the 20 volt supply to the loud sounding buzzers (202) (206). When the operator in the main office makes the filament control switch (163) to transmit on power an auxiliary contact on the switch (163) makes the 20 volt supply to the buzzers (202) (206) and warning lamps (203) (207) in the D/F and Second offices respectively. The warning lamps (203) (207) will burn as long as the filament control switch (163) is made but the circuit to the buzzers (202) (206) is broken by the respective aerial safety switches (601) (208) when the operators earth their aerials. In addition to breaking the circuit to the buzzers (202) (206) the aerial safety switches complete the supply to reply lamps (204) and (205) fitted on the Board 2G Controlling. The reply lamps (204) (205) indicate to the operator in the main W/T office that the D/F and Second office aerials are earthed and it is safe to transmit. A gate switch contact (201) breaks the supply to the buzzers (202) (206) and warning lamps (203) (207) when the gate is opened. An additional contact on the H/F send-receive control switch (160) breaks the supply to the buzzers (202) (206) and warning lamps (203) (207) when the H/F send-receive switch is made to "send" as it is not necessary to earth the D/F and Second office aerials when transmitting on the H/F set.

It should be noted that the reply lamps (204) (205) will light when the aerials in the D/F and Second offices are earthed by the aerial safety switches (601) (208) irrespective of the position of the H/F send-receive control switch (160), the filament control switch (163) and gate switch contact (201), thus affording the main office a permanent indication whenever the D/F or Second office aerials are earthed.

WAVECHANGE LINKBOARDS.

To enable quick wave changing an arrangement of links is provided for varying the inductance coils in the aerial and grid circuits. The main linkboard, see figure u, consists of three rows of link connections for adjusting the upper and lower tappings and the anode tapping leads to the main aerial coil (214). Separate linkboards are fitted to the 90 mic. coil (215), fine tuning coil (221) and the grid tuning coils (43) (See figure y.). In each case the connecting link can be used in one of six positions marked "A" to "F". Connections to the linkboards are made for the six frequencies which are more generally used. After the set has been tuned the connections to the linkboards are arranged so that the links on all the linkboards are in "A" position for one frequency, in "B" position for another frequency and so on, thus enabling wave to be changed quickly to any of six predetermined frequencies.

When using the 3G L/F set for transmitting on 500 kc/s. the main aerial coil (214) is not usually required in circuit and it is necessary to connect the anode tapping lead to the 90 mic. coil. For this reason the anode tapping link fittings which would be used for this frequency are fitted on the paxolin supports for the 90 mic. coil (215) instead of the main wavechange linkboard. The anode tapping lead from the anode blocking condensers (231) (232) is then connected to the link fittings on the 90 mic. coil supports in addition to the main wavechange linkboard. A lead is permanently connected between the tapping position on the 90 mic. coil and the link fittings on the paxolin supports. The link is then inserted in this position when transmitting on 500 kc/s.

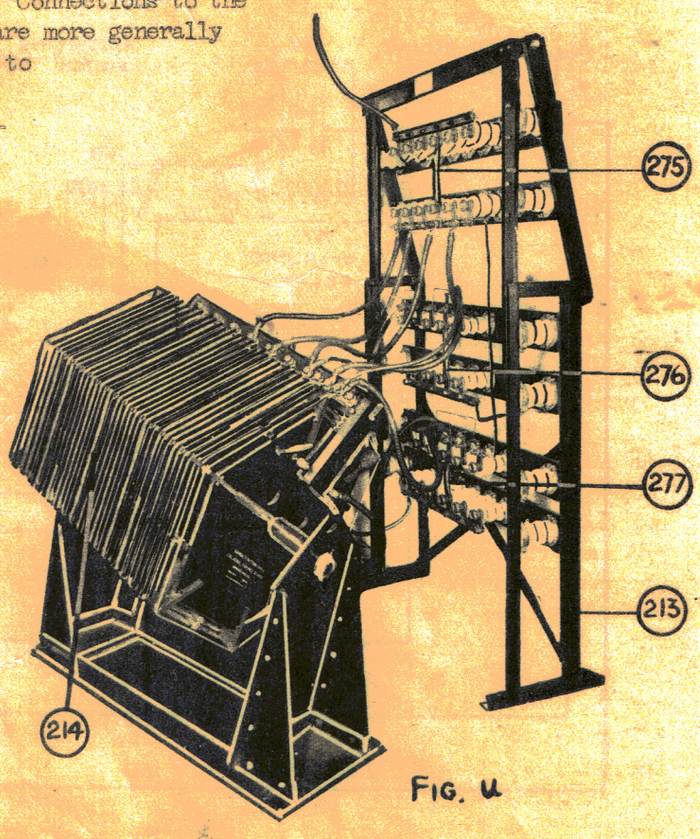

FIG. U

RE 19
~~R43~~

TYPE 36 S

20 VOLT WARNING CIRCUITS.

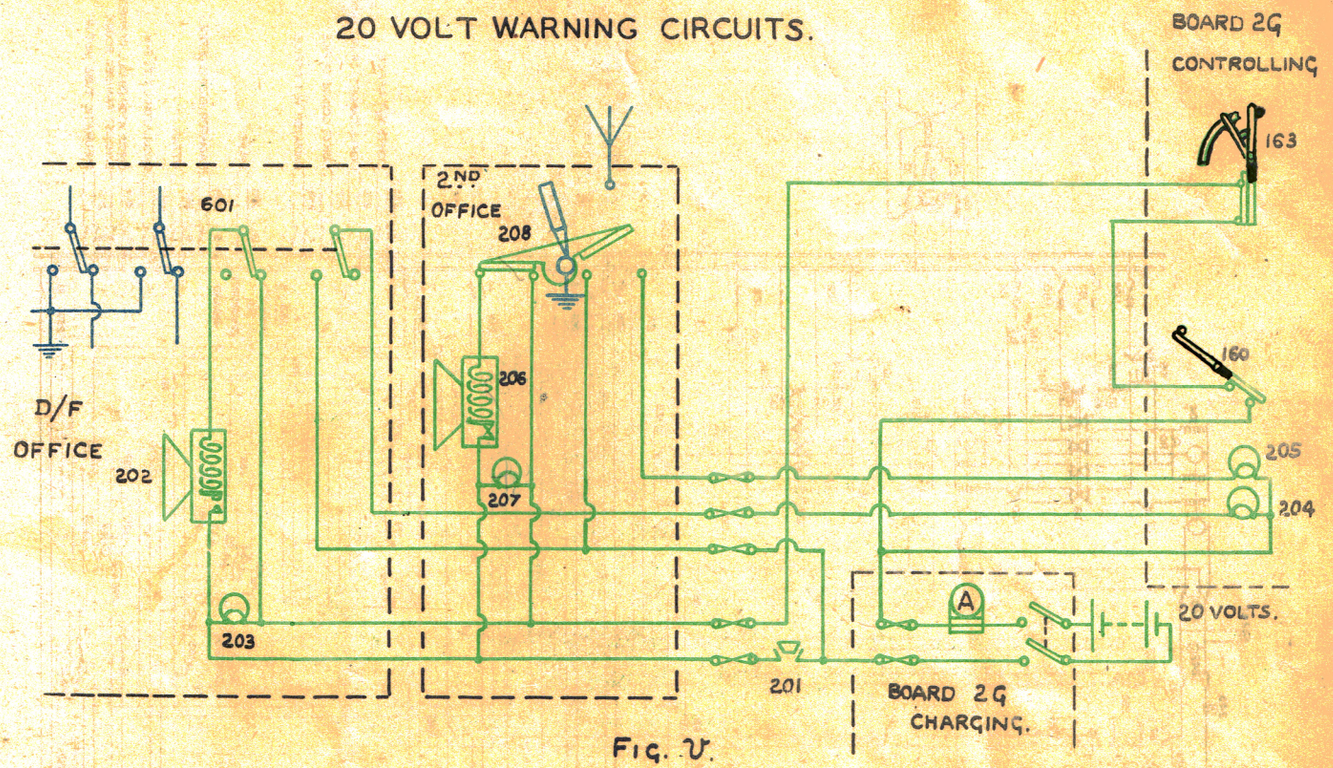

FIG. V.

AERIAL CIRCUITS.

The aerial circuits and methods of connecting the transmitters to the aerial are shown in figure w. Separate single wire aerials are connected to the cabinet switch (180) for the receiving sets and the main aerial can be used for reception if desired. The aerial can be connected to the L/F or H/F sets by a flexible lead (210).

When using the main aerial for H/F reception it is necessary to disconnect the L/F aerial circuit from the cabinet switch (180) in order to prevent a large capacity to earth, through the L/F aerial circuit, being left connected to the H/F receiver. This is done by the L/F – H/F change over link (229).

In the L/F position the link (229) connects the operating switch (228) to the cabinet switch (180) for normal L/F reception and disconnects the cabinet switch (180) from the H/F send-receive switch (80).

In the H/F position the link (229) connects the H/F send-receive switch (80) to the cabinet switch (180) for H/F reception and disconnects the operating switch (228) from the cabinet switch (180)

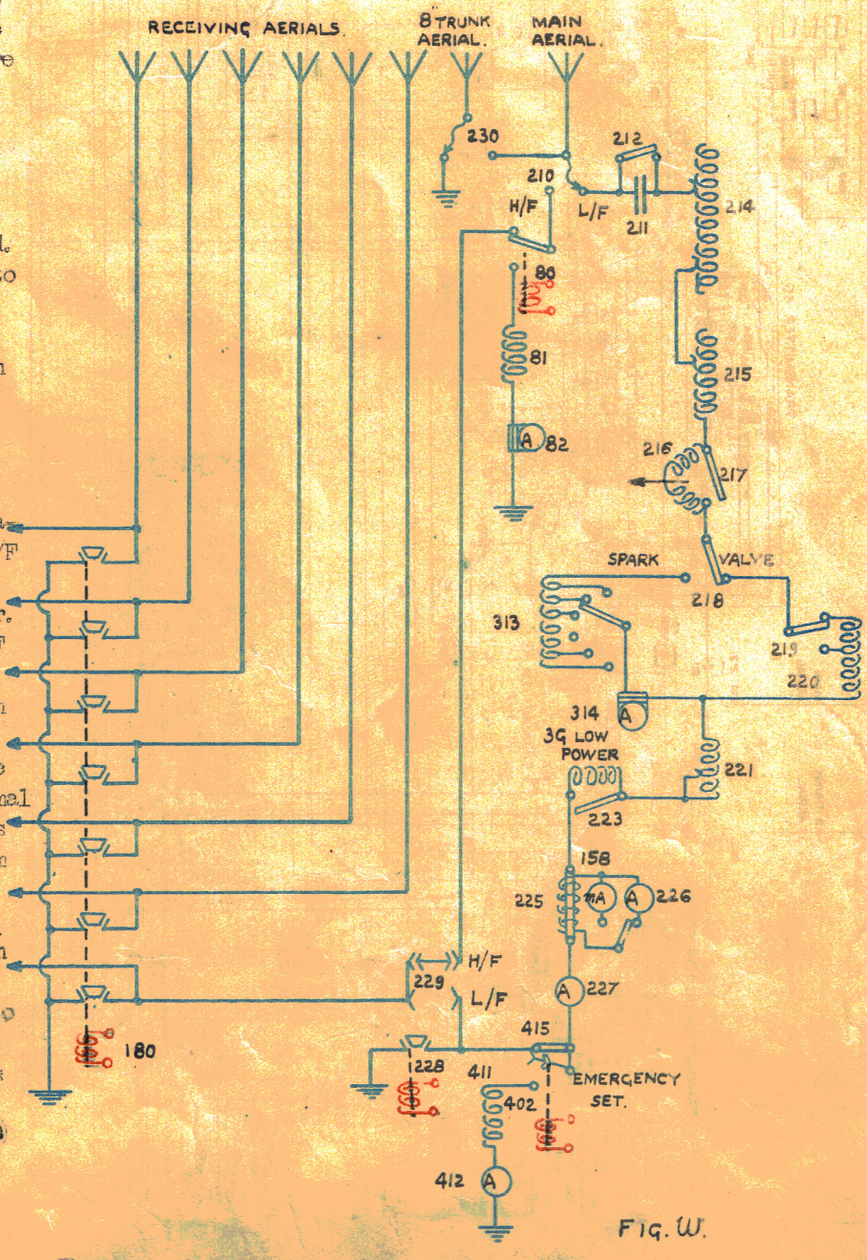

FIG. W.

RE 20
~~R44~~

TYPE 36S

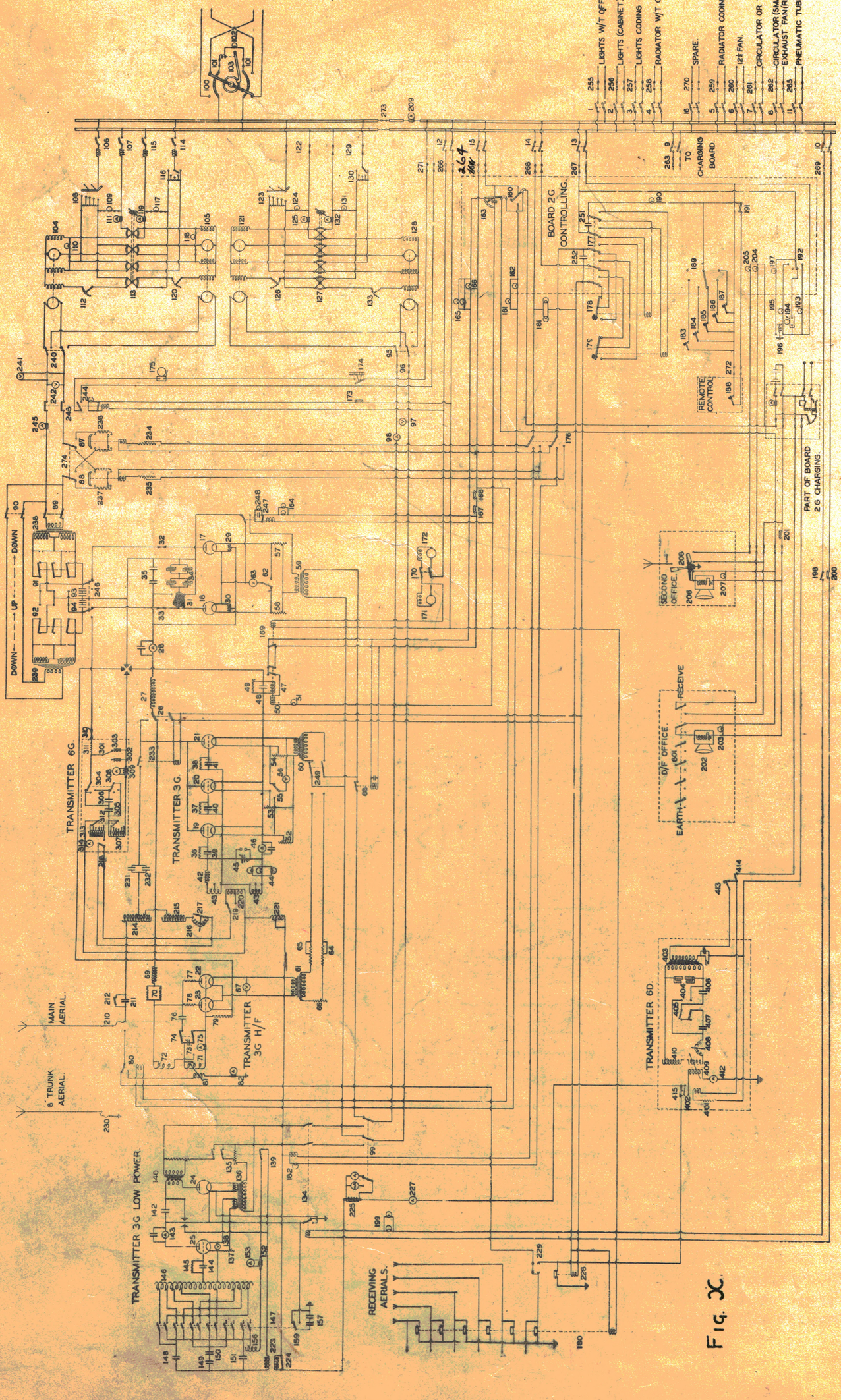

Fig. X.

TYPE 36 S

PANEL 3G SPARK, UPPER | PANEL 3G RECTIFYING, UPPER. | PANEL 3G TRANSMITTING, UPPER. | PANEL 3G SHORT WAVE, UPPER. | PANEL 3GL UPPER.

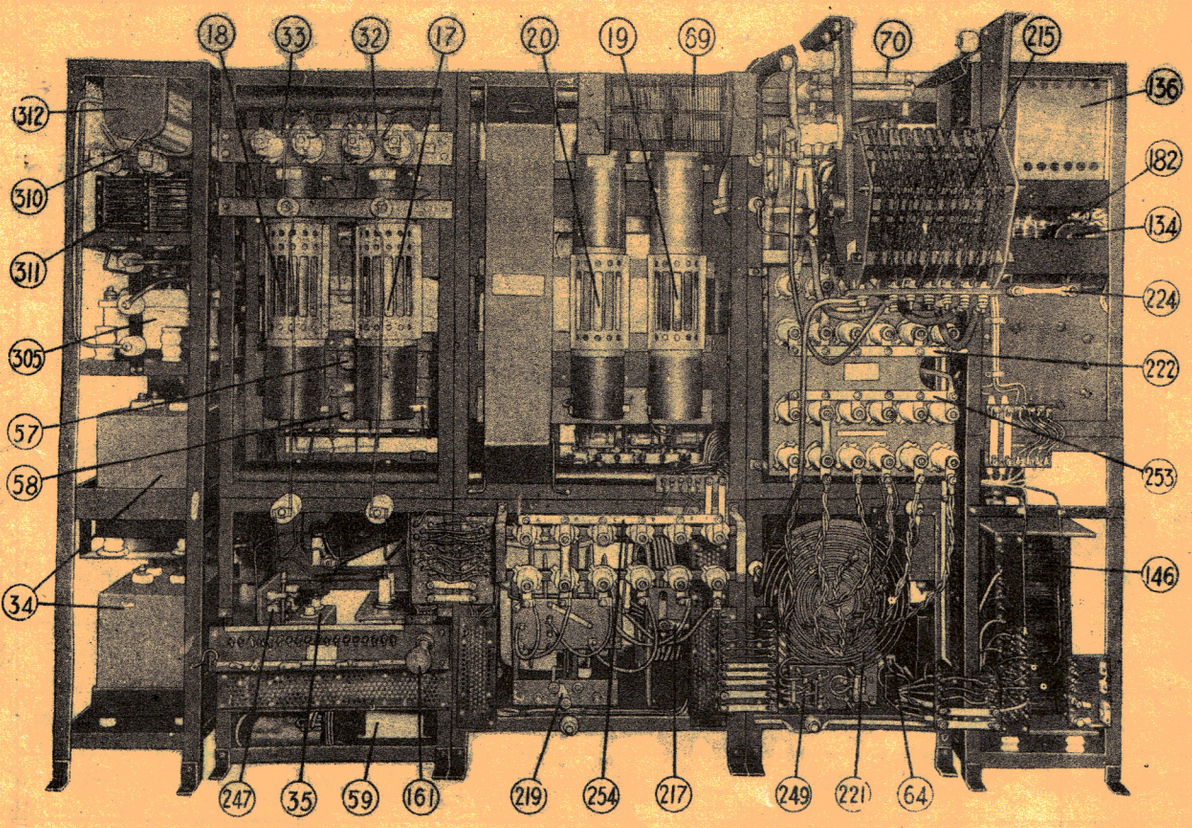

PANEL 3G SPARK LOWER | PANEL 3G RECTIFYING LOWER | PANEL 3G TRANSMITTING, LOWER | PANEL 3G SHORT WAVE, LOWER. | PANEL 3GL LOWER.

FIG. Y.

PANEL 3GL UPPER | PANEL 3G SHORT WAVE, UPPER | PANEL 3G TRANSMITTING UPPER | PANEL 3G RECTIFYING UPPER | PANEL 3G SPARK, UPPER.

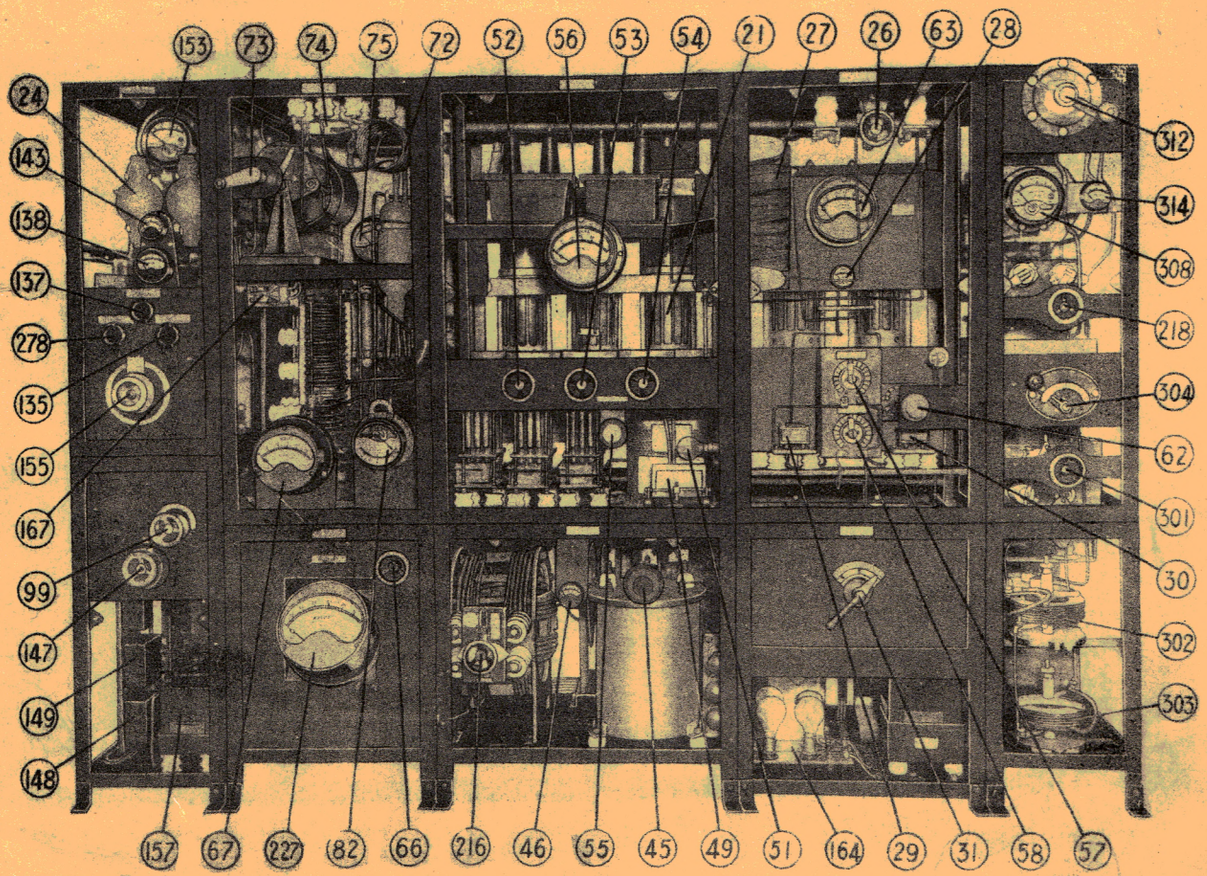

PANEL 3GL LOWER. | PANEL 3G SHORT WAVE, LOWER. | PANEL 3G TRANSMITTING LOWER. | PANEL 3G RECTIFYING LOWER | PANEL 3G SPARK, LOWER.

FIG. Z.

TYPE 36M.

DETAILS OF COMPONENTS.

Transmitter.	3GB, L/F.	3GB, H/F.	Spark Transmitter.	6D.
Frequency range, kc/s.	60 - 500	3,000 - 20,000	66 - 500	66 - 500
Power Supply.	20 kW. Alternator.	20 kW. Alternator.	20 kW. Alternator.	20 volt Battery.
Filament Supply.	3 kW. Alternator.	3 kW. Alternator.	-	-
Valves used, See Section J.	2 NT23D (Trans.) 1 NT23D (Abs.) 1 NU1 (G.S.) 2 NU22C (Rect.)	1 NT23D (Trans.) 1 NT23D (Abs.) 1 NU1 (G.S.) 2 NU22C (Rect.)	-	-
Wave form.	C.W. and I.C.W.	C.W. and I.C.W.	Spark.	Spark.
Associated Wavemeters.	G56.	G56.	G56.	G56.
Approximate Range in Miles.	1000	World wide at times.	150	50
Date of Design.	1934.	1934.	1934.	1928.
Power to Final Stage.	8 to 10 kW.	3 kW.	1.5 kW.	40 watts.
Reference Page.	RE33.	RE36.	OB7.	OB2.

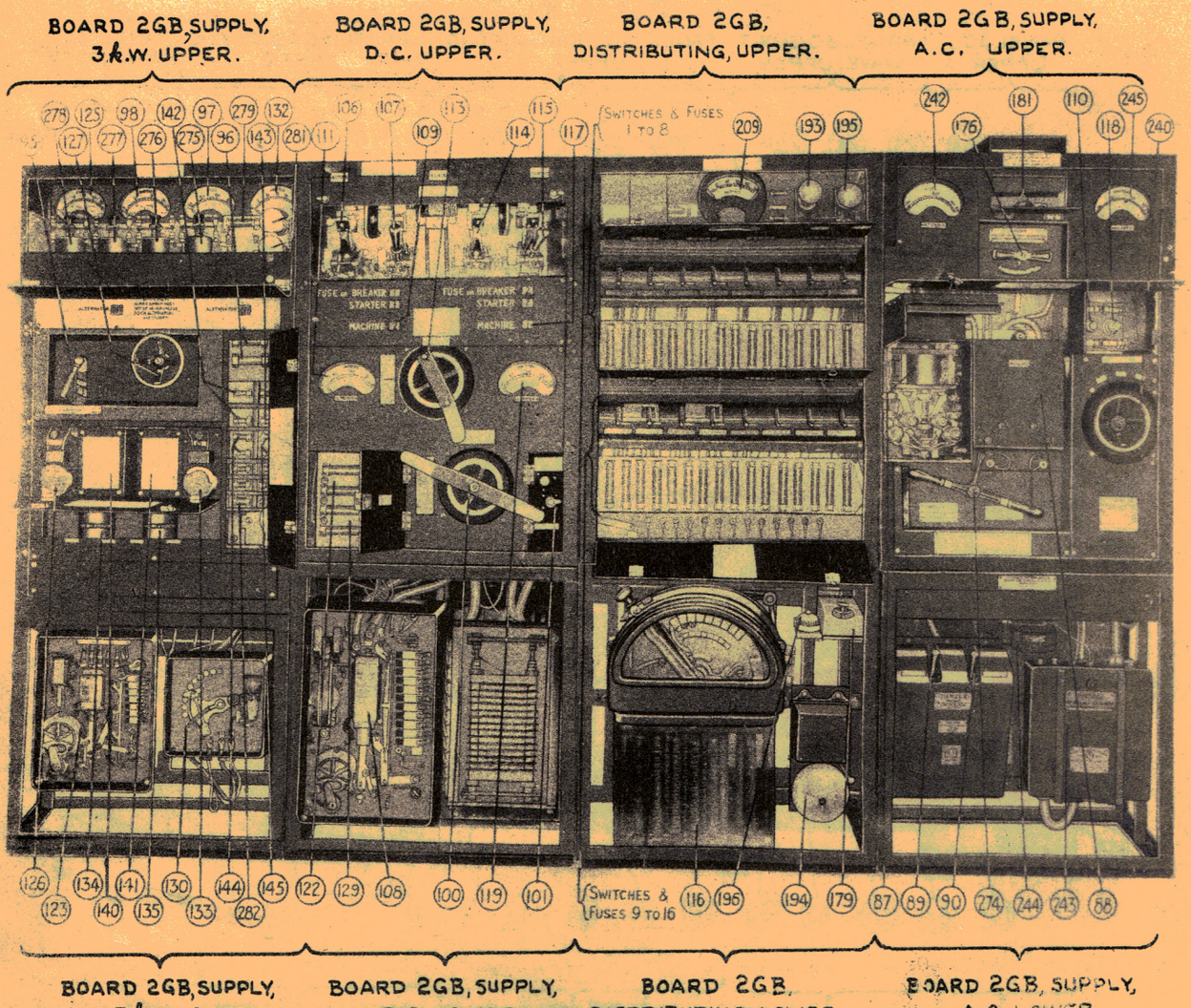

FIG. a.

TYPE 36M

COMPOSITION OF PANELS

Type 38M is a modernised design of Type 36S, which occupies the same office space as the latter, utilises the same aerial trunks and the same main and filament alternators. Limitations of space prevented the use of master controlled circuits and, for this reason, self-excited circuits with the maximum frequency stability obtainable have been fitted.

The chief alterations embodied in the new set are:-

(i) Improved H/F performance.
(ii) Greater frequency stability.
(iii) Arrangements for grid signalling, thus enabling the set to be used for automatic high speed transmissions, if required.
(iv) Removal of the low power attachment and the provision of means whereby the L/F transmitter can be used at a low voltage to meet low power transmission requirements.
(v) Inclusion of a spark transmitter for use in cases of emergency.
(vi) Automatic control of the output voltage from the filament alternators by means of reversing boosters.
(vii) Removal of the aerial tuning linkboard.

Certain of the Type 36S power boards have been modified for use with Type 36M and are known as Boards 2GB. These boards have the letter "M" included in the pattern number. Those boards which have not been altered and are common to both Types 36S and 36M do not include "M" in the pattern number. A photograph of the assembled boards is shown in figure a. Their full title is too cumbersome for instructional purposes and they will be referred to as Nos. 1, 2, 3 and 4 power boards in these notes as shown below.

No. 1	No. 2.	No. 3.	No. 4.
Board 2GB Supply, 3 kW. Upper.	Board 2GB Supply, D.C. Upper.	Board 2GB Distributing Upper.	Board 2GB Supply, A.C. Upper.
Board 2G Supply, 3 kW. Lower.	Board 2G Supply, D.C. Lower.	Board 2G Distributing Lower.	Board 2GB Supply, A.C. Lower.

All the Type 36S valve panels have been modified for Type 36M and are known as Panels 3GB. An additional panel, Panel 3GB, Absorber Resistance, Upper and Lower, is fitted in the safety enclosure. The panels containing the transmitting circuits face the power boards. The arrangement of the panels, their storekeeping titles and the name by which the various panels will be referred to in these notes is shown below. Photographs of the panels are shown in figures y and z.

Spark Transmitter.	Transmitter 3GB H/F.	Transmitter 3GB L/F	Rectifying Panel.	Smoothing Panel.	Absorber Resistance Panel.
Panel 3GB Spark.	Panel 3GB Transmitting H/F. Upper	Panel 3GB Trangmitting L/F. Upper.	Panel 3GB Rectifying, Upper.	Panel 3GB Smoothing, Upper.	Panel 3GB Absorber Resistance. Upper.
Grid Signalling.					
Panel 3GB Grid Signalling.	Panel 3GB Transmitting H/F. Lower.	Panel 3GB Transmitting L/F. Lower.	Panel 3GB Rectifying, Lower.	Panel 3GB Smoothing, Lower.	Panel 3GB Absorber Resistance. Lower.

The spark transmitter uses the same circuit as transmitter 6G which is described on pages CB6 and CB7, with the exception that only one spark gap is fitted.

The power supply for the spark set is obtained from the main H.T. transformers as explained on page RE28.

The emergency set, Transmitter 6D, is fitted inside the safety cage.

The switches necessary for the control of the set are assembled in Board 2GB, Controlling (See figure w), which is fitted in the C.R.R. The "ON" and "OFF" pushes for the auto-starters are also fitted in the C.R.R. as are the main alternator field regulators (112)(120), A.C. voltmeter (241) (see figure b) and the aerial ammeter (228) (see figure l).

TYPE 36M

20 K W. SUPPLY.

Main Alternators 20 kW. Circuit breakers (106)(107) and (114)(115) connect the main bus bars to the X size automatic starter (108)(See page MA5), and hand starter (116)(See sub-section MB), respectively which control the main alternators for the H.T. supply. The circuit breakers are mechanically set to "ON" by hand and if an excessive current is taken by the alternator break to "OFF" by the action of the bobbin shown diagrammatically in series with the contact. They can also be broken by pressing an "OFF" push. An eight pole change-over switch (113) connects the starters (108)(116) to the main alternators and enables either starter to be used for either machine and both machines can be run simultaneously. The motor end of the machines can be completely isolated by setting the C.O.S. (113) to "OFF". Indicating lamps (109)(117) are connected between the armature terminals of the starters and the negative contacts of the circuit breakers. The lamps are situated behind a glass slide which is moved by an arm on the C.O.S. (113) and indicates the combination of breaker, starter and machine in use and "OFF" when the C.O.S. (113) is in the "OFF" position (see figure a). If an automatic starter (108) is switched on with the C.O.S. in the "OFF" position, the indicating lamp (109) will reach full brilliancy as soon as the starter connects with the first contact as only the 6 ohm starter resistance is in series with it. When the auto-starter (108) is connected to the machine by the C.O.S. (113) and the starter switch is "ON", the indicating lamp (109) will first glow and finally reach full brilliancy when the machine is running at full speed. This effect is due to the indicating lamp being connected in parallel with the motor armature, the effective resistance of which increases as the motor gathers speed and so increases the back E.M.F. The same effect is, of course, obtained with the hand starter (116) and indicating lamp (117) in use.

Machine running lamps (110) and (118) are also fitted and are connected between the series and shunt fields of the motor and thus indicate that power is being supplied to the alternators.

The alternator field regulators (112)(120) and an A.C. voltmeter (241) are fitted in the C.R.R.

Emergency supply terminals (293)(294) are fitted at the back, in the top of No.2 power board so that an outside source of supply can be connected to the main bus bars (284) in the event of failure of the supply from both branch breakers.

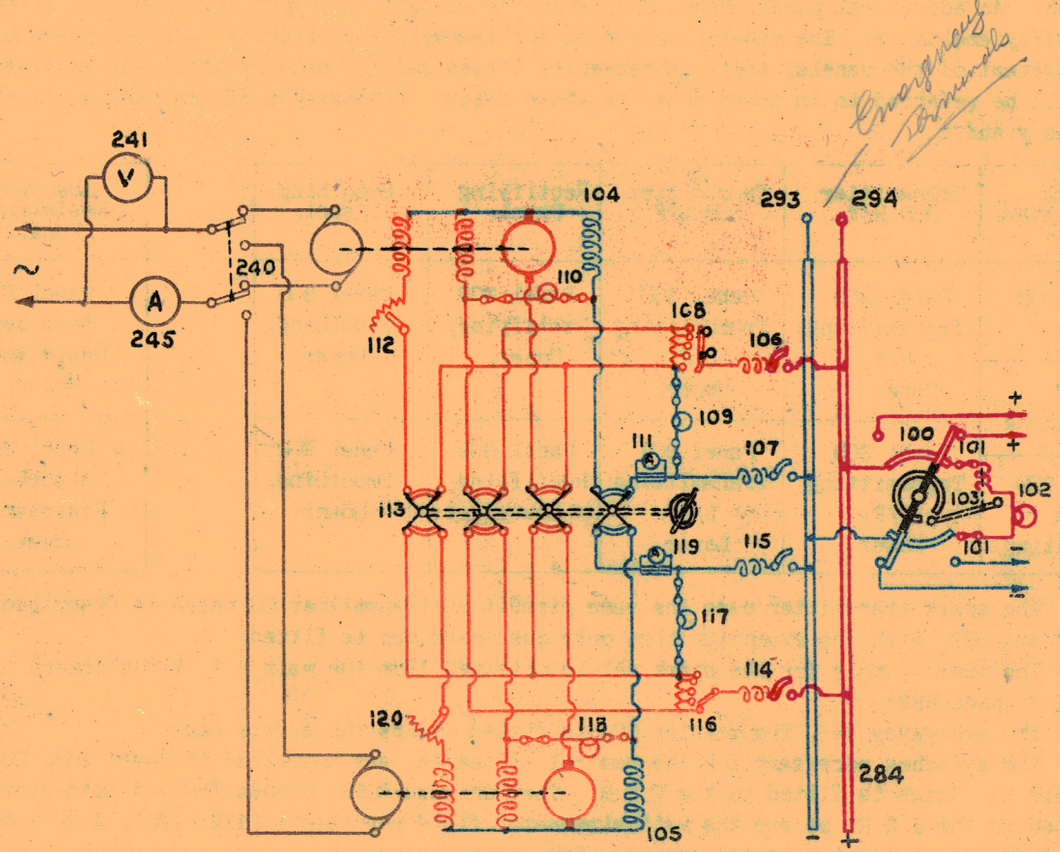

Fig. b.

3 K.W. SUPPLY.

Filament Alternators 3 kW (See figure c). Two pairs of fuses (122) and (129) connect the main bus bars to the W or Z size automatic starter (123) and hand starter (130) respectively, which control the 3 kW alternators for the filament supply to all valves and the H.T. and filament supply for the grid signalling rectifier valve (24). The fuses (122)(129) correspond to the circuit breakers in the 20 kW main alternators supply.

An eight pole change-over switch (127) connects the starters (123)(130) to the filament alternators and carried out the same functions as the C.O.S. (113) used for the main alternators with the addition that a special 4 pole change-over switch is fitted on the spindle for the purpose stated below.

Reversing Boosters. (See Admiralty Handbook of W/T (1931), paragraph 250, et seq.). Reversing boosters (136)(137) and contactors (140)(141) are used in conjunction with the filament alternators to maintain the output voltage from the machine approximately constant at 130 volts. "Hand-Auto" switches (134)(135) enable the A.C. output voltage to be hand or automatically controlled. With the "Hand-Auto" switches (134)(135) in the "Hand" position, the voltage is controlled by the alternator field regulators (126)(133) and in the "Auto" position by the boosters and contactors. The A.C. output from the alternators is connected to the booster contactors by the additional 4 pole switch on the machines and starters C.O.S. (127). This ensures that the appropriate booster is connected to the alternator in use irrespective of the combination of machine and starter.

D.C. SUPPLY TO 3 K.W. MOTOR ALTERNATORS AND REVERSING BOOSTERS.

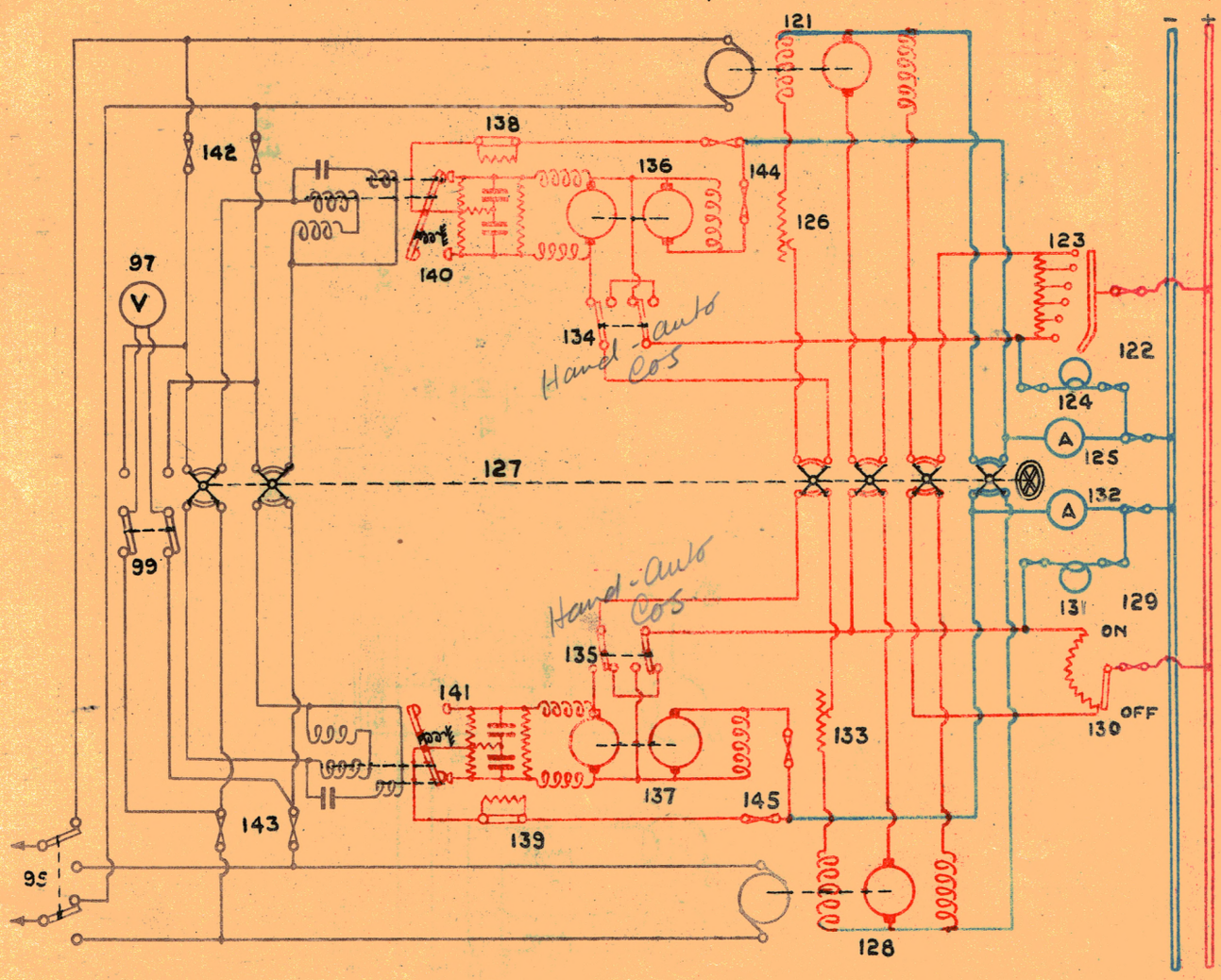

FIG. C.

RE26

TYPE 36M

20 K.W. SUPPLY.

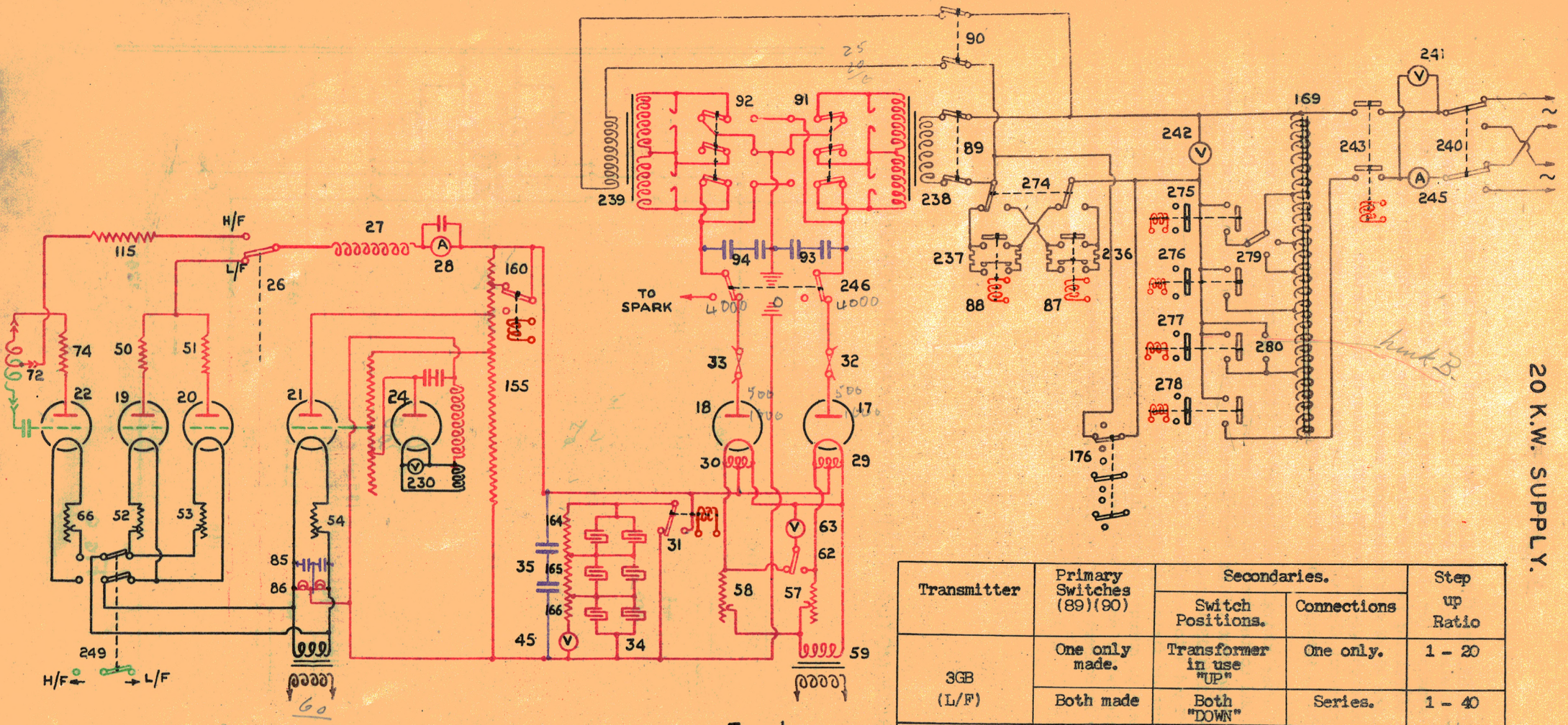

FIG. d.

Transmitter	Primary Switches (89)(90)	Secondaries.		Step up Ratio
		Switch Positions.	Connections	
3GB (L/F)	One only made.	Transformer in use "UP"	One only.	1 - 20
	Both made	Both "DOWN"	Series.	1 - 40
3GB (H/F)	One only made.	Transformer in use "UP"	One only.	1 - 20
	Both made	Both "UP"	Parallel.	1 - 20
Spark.	One only made.	Transformer in use "UP"	One only.	1 - 20
	Both made	Both "UP"	Parallel.	1 - 20

20 K.W. SUPPLY.

Main A.C. Supply. (See figure d). The main A.C. output is connected to the main A.C. C.O.S. (240) which should be set to the machine in use. The heel contacts of this switch (240) are connected to the relay switch (243 which is a double pole switch and is operated by a gate switch (168) on the cage door, a safety switch (167) on the removable front cover of the H/F panel and one of the single-pole controlling switches fitted in the C.R.R. bays. (See notes on D.C. switch (12)). The A.C. C.O.S. (240) and relay switch (243) are fitted in No.4 power board. From the relay switch (243) the A.C. supply is taken to an auto-transformer (169) from which tappings are taken to a series of contactor switches (275) to (278) which are magnetically operated and controlled by the power tapping switch (170) on Board 2GB Controlling. The tappings give either full, two-thirds, one-half or low power. The low power contactor switch (275) will give either one-third, one-sixth or one-twelfth power, according to the setting of a link (279) which connects the appropriate tapping on the auto-transformer (169). The auto-transformer (169), contactor switches (275) to (278) and the low power link (279) are fitted in the top of No.1 power board. The A.C. output from the 20 kW. alternators should be adjusted to 300 volts by means of the alternator field regulators. For L/F transmissions, using grid signalling, the two-thirds power tapping should not be exceeded but for primary signalling the full power tapping can be used. For H/F transmissions the full power tapping can be used for grid or primary signalling as the H.T. transformers secondaries are connected in parallel for H/F. (See notes on Main H.T. Supply, page RE28).

Two pairs of terminals, marked "Link A" and "Link B" respectively, are fitted below the fuses in No.1 power board. A link (282) can be connected across either pair of terminals. When the link is connected in "Link A" position, it is used to complete the D.C. supply to the bobbin circuits of the contactor switches (275) to (278). (See notes on D.C. Switch 10). In position "Link B" the link is placed across the terminals (280) and thereby short circuits the A.C. contacts of the two-thirds power contactor switch (277). With this arrangement the A.C. supply, with two-thirds power, can be used in the event of a failure of the contactor bobbins circuit.

A voltmeter (241) and an ammeter (245) are connected in the A.C. supply circuit between the A.C. C.O.S. (240) and the relay switch (243). The voltmeter is fitted in the C.R.R. and indicates the output voltage of the 20 kW. alternators. The voltage should be adjusted to 300 volts by means of the alternator field regulators (112)(120) which are fitted so that their controlling handles protrude into the C.R.R. The ammeter (245) and a second A.C. voltmeter (242) are fitted in No.4 power board. This voltmeter (242) indicates the tapped A.C. voltage from the auto-transformer (169).

Two H.T. transformers (238)(239). are fitted, either or both of which can be used by setting the primary paralleling switches (89)(90) and the secondary switches (91)(92) to the appropriate position, as shown in the table, figure d. The primary switches (89)(90) are fitted in No.4 power board and the secondary switches (91)(92) above the transformers in the safety enclosure. The two primary switches (89)(90) isolate either primary or connect the primaries in parallel as required.

The A.C. supply is completed by the magnetic keys (87) and (88) for "Primary" signalling, either of which can be used by setting the change-over switch (274) to the magnetic key required. Double contacts are fitted in the magnetic keys (87)(88) with non-inductive resistances (236)(237) connected across each side to prevent arcing. The magnetic keys (87)(88) are not used for "grid" signalling. The D.C. supply to the bobbins of the keys is then broken and the A.C. supply to the C.O.S. (274) is short-circuited by setting the magnetic keys C.O.S. (176) to the mid-position which is marked "valve panels magnetic key".

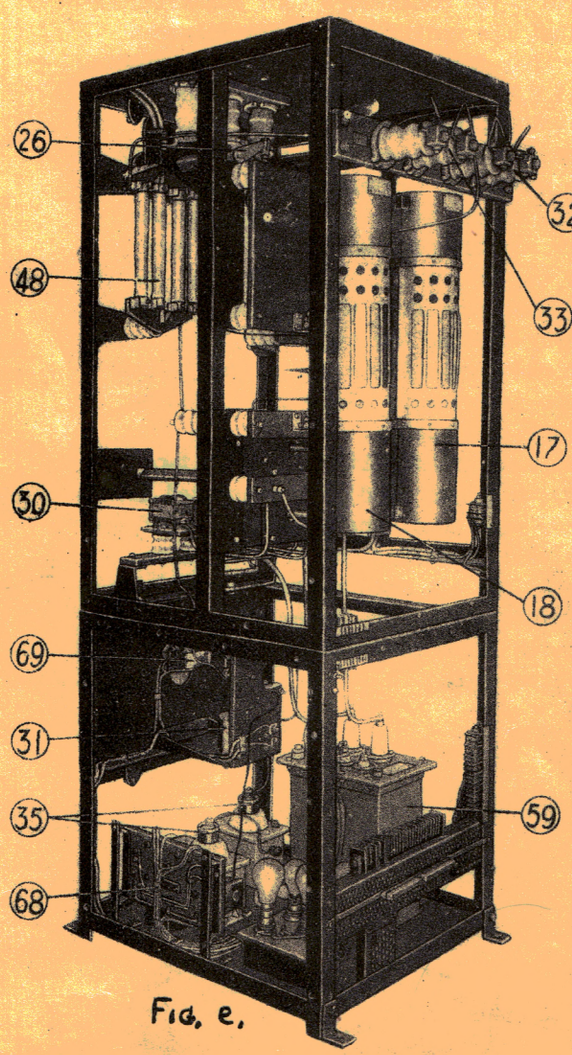

Fig. e.

TYPE 36M

20 K.W. SUPPLY.

Main H.T. Supply. (See figure d). The main transformers (238)(239) and main rectifying valves (17) (18) supply H.T. to the L/F or H/F transmitting valves. Each transformer has a step-up ratio of 1 to 40 but it should be noted that this ratio is halved when the centre point of the secondary winding is earthed. In normal circumstances both transformers are used for valve and spark transmissions. The connections and methods of using the transformers for spark transmissions are explained on page OB7. Series-parallel switches (91)(92) are fitted in the secondaries and, in conjunction with the primary paralleling switches (89)(90), should be set so that the secondaries are in "Series" for L/F and in "Parallel" for H/F transmissions. When using both transformers, the power tapping should not exceed two-thirds power for L/F transmissions with grid signalling as the grid signalling circuits are not satisfactory when using the maximum H.T. voltage with the open grid type of transmitting valves used in this set.

When in the "Series" position, with both switches (91)(92) "Down", the transformer secondaries are connected to earth by the switches (91)(92) at the ends which are joined. In the "Parallel" position, with both switches "Up", the centre points of the secondaries are earthed. An interlocking device prevents one transformer secondary being set to "Series" position while the other is to "Parallel" position.

Each secondary is protected from stray oscillatory currents by two 1-jar condensers (93) (94) in series and safety horns are connected across each half of the secondary windings. The H.T. supply can be connected to the main rectifying valves (17)(18) or the spark transmitter by the valve-spark switch (246) which is fitted in the safety cage. Equaliser coils (29)(30) connect the filaments of the rectifying valves to the anode ammeter (28), anode choke coil (27) and H.T. C.O.S. (26). The H.T. C.O.S. (26) connects the H.T. supply to the L/F or H/F transmitter.

A smoothing unit, consisting of six 1-mfd. condensers (34) arranged two in parallel, three in series, can be connected across the H.T. supply by means of the C.W. switch (31). This switch is magnetically operated and controlled by the C.W. - I.C.W. switch (69) fitted on the front of the rectifying panel. (See figures t and z).

Each pair of condensers in the smoothing unit is connected in parallel with a discharge resistance of 120,000 ohms; the total resistance across the smoothing condensers is, therefore, 360,000 ohms. These discharge resistances (164)(165)(166) are also used as a series resistance for a voltmeter (45) which is calibrated to indicate the H.T. voltage su plied to the transmitting valves. The voltmeter will only operate when using C.W.

Two 1-jar condensers (35) connected in series protect the rectifying valves filament transformer (59) from stray oscillatory currents when using I.C.W. (See Admiralty Handbook of W/T (1937) Vol II, Section "K" (54))

No rectifying switch is fitted in this set but the smoothing condensers (34) are discharged to earth, after using C.W., by the C.W. - I.C.W. switch (31) when the cage door is opened. If the C.W. - I.C.W. switch (31) remains in the "ON" position after the bobbin circuit has been broken by opening the cage door, the smoothing condensers will be discharged through the discharge resistances (164)(165)(166) and the absorber resistance (155).

An equalising unit (85), with two 50 c.p., 100 volt lamps (86), is connected across the secondary winding of the filament transformer (60). This unit completes the H.T. negative return circuit for all the transmitting valves and the absorber valve. In later sets the units are fitted with fixed resistances instead of the two 50 c.p. lamps (86).

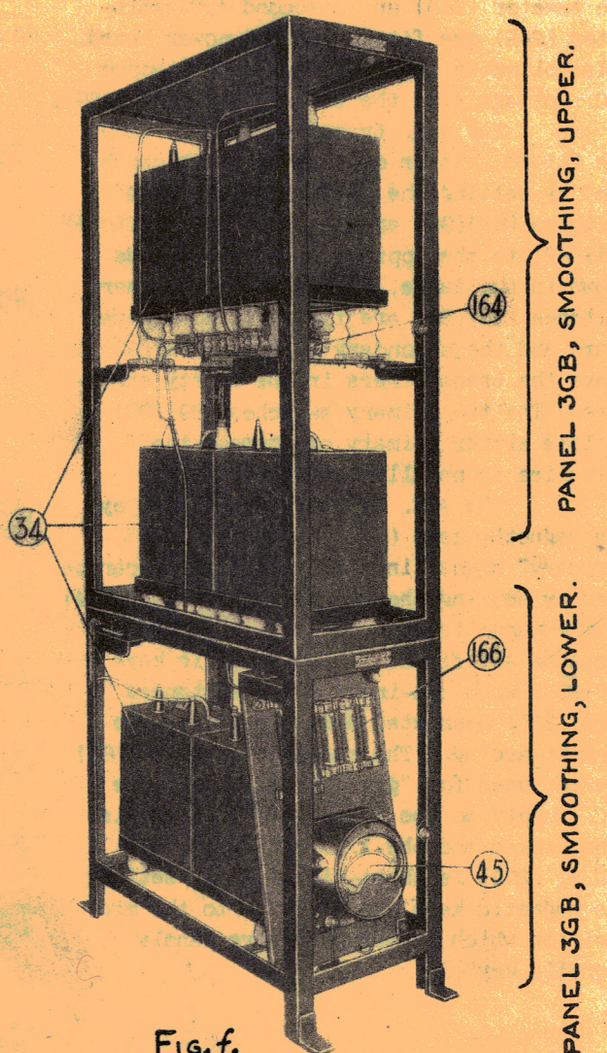

FIG. f.

3 K.W. SUPPLY

Filaments Supply (See figure g). All the valve filaments are fed from the 3 kW., 130 volts A.C. supply through voltage step-down transformers. The grid signalling rectifier valve (24) obtains its H.T. and filament supplies from two transformers (223)(235), the supply to these transformers being completed by the grid signalling relay (146) when the filament switch (68) is made. Two 32 c.p. 110 volt lamps (224), in parallel, are connected in series with the supply to the filament transformer (235) but no filament rheostat is fitted. A voltmeter (230) is connected across the filament of the rectifying valve (24).

The filaments of the rectifying valves (17)(18) are fed from one transformer (59) with separate rheostats for each valve. The filaments of the absorber, L/F and H/F transmitting valves are all fed from one transformer (60); the L/F valves (19)(20) or H/F valve (22) being connected to the filament supply by the L/F – H/F C.O.S. (249). Separate rheostats are fitted in the supply to each valve.

It will be found that the filament voltage of the absorber valve (21) will vary, due to the difference in load on the transformer (60), when changing from L/F (two valves) to H/F (one valve) or vice versa. In order to minimise this variation in voltage, the filament rheostat (54) of the absorber valve (21) should be set to a position where the mean of the high and low reading in the filament voltmeter (56) is, as near as possible, the correct value for the absorber valve. One voltmeter (56) is used to indicate the filament voltage of any of the transmitting valves or the absorber valve and is connected to the valve desired by a change-over switch (55).

FILAMENTS SUPPLY.

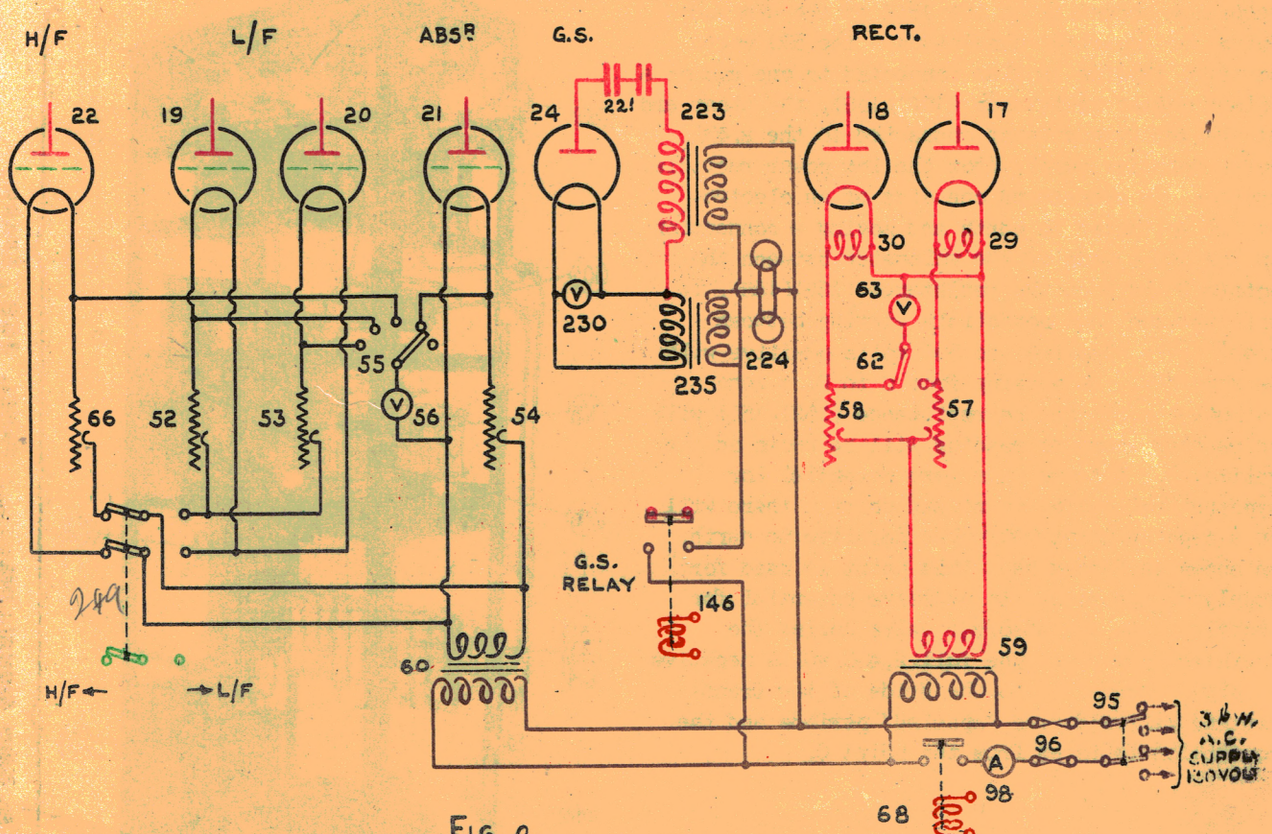

FIG. g.

TYPE 36M

GRID SIGNALLING AND ABSORBER CIRCUITS.

Grid signalling and Absorber Circuits. The normal method of signalling for both L/F and H/F transmissions is by grid control, with primary signalling as an emergency condition. The conditions required for grid signalling during the "spacing" and "marking" periods are as follows:-

Spacing.

(a) Transmitting valves shut down by a negative potential of about 2,400 volts applied to the grid circuit.

(b) Absorber valve grid connected to a positive potential of about 500 volts.

Marking.

(a) Transmitting valves grid circuit connected to filament (i.e., earth).

(b) Absorber valve shut down by a negative potential of about 800 volts applied to the grid.

The negative potentials are obtained from the valve and components of the rectifier unit which were fitted in the old 3GL low power transmitter. A simplified diagram of the circuit used for obtaining the 2,400 volts negative potential is shown in figure h.

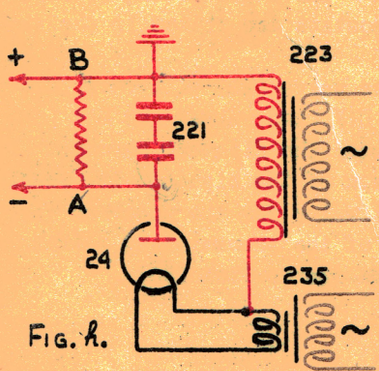

Fig. h.

When the A.C. supply to the transformers (223)(235) is made, the valve (24) acts as a half wave rectifier and the rectified anode current will produce a D.P. across the condensers (221) and the resistance between A and B slightly less than the peak value of the transformer secondary voltage. It should be noted that the point A on the resistance is negative with respect to point B and that the latter point is earthed. It will be seen that, by connecting point A to the grid of a valve which has its filament connected to earth, a negative bias, equal to the D.P. across the condensers (221), can be applied to the grid of the transmitting valve. The resistance between A and B in figure h consists of the resistances (152) (153) and part of (155) shown in figures hb, hc and k. The positive potential for the absorber valve grid is obtained by tapping a potentiometer resistance across the main H.T. supply.

A simplified diagram of the circuits used to obtain the necessary potentials for signalling, outlined above, is shown in figure ha, in which all keying circuits have been omitted. The absorber resistance (155) is connected across the H.T. supply to the anodes of the transmitting valves and a tapping on the resistance (155) is connected to the anode of the absorber valve. Another tapping is made on the resistance (155) at a point which is approximately 500 volts positive to earth. This tapping is used to provide the requisite potential on the grid of the absorber valve for "spacing" conditions. The 500 volts positive tapping is also connected to one end of a potentiometer resistance (152)(153), the other end of the resistance being connected to the 2,400 volts negative supply from the low power rectifier system. By connecting one side of an electrostatic voltmeter to earth and moving a connection on the other side of the voltmeter between the points C and D on the resistance (152)(153), it will be seen that potentials varying between 2,400 volts negative and 500 volts positive will be recorded. In passing from C to D, a zero potential point on the resistance (152)(153) will be reached where no reading will be shown on the voltmeter. Between this zero potential (or hypothetical earth) point and point C there will be a tapping point 800 volts negative to earth, as shown in figure ha. This point is used for supplying the requisite negative potential for shutting down the absorber valve during the "marking" periods. The full 2,400 volts negative supply is connected to the grids of the transmitting valves during "spacing" periods and the connection is taken from the point C.

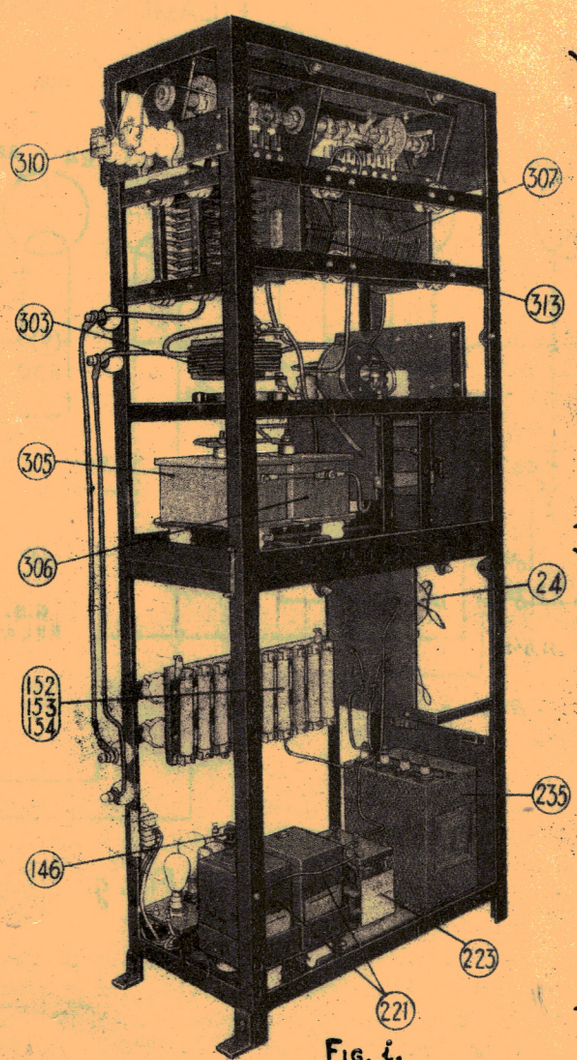

Fig. i.

GRID SIGNALLING AND ABSORBER CIRCUITS (CONTD.)

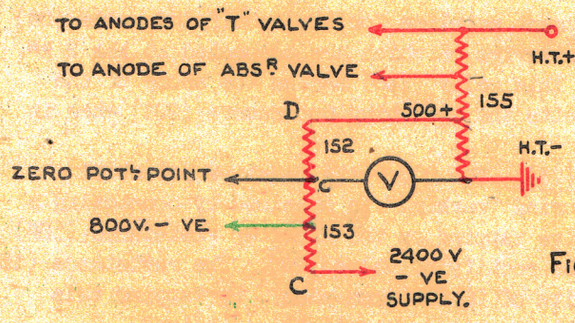

Fig. 4a.

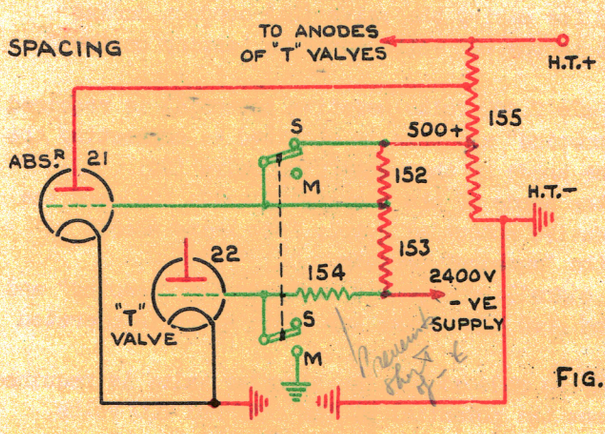

Fig. 4b.

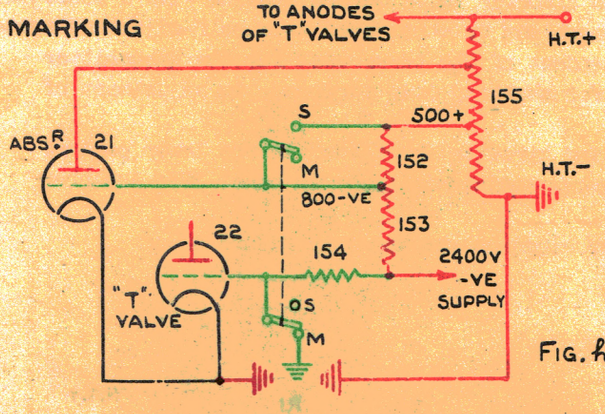

Fig. 4c.

Spacing. The functions of the grid signalling key in connecting the requisite potentials to the absorber and transmitting valves during "spacing" are shown in the simplified diagram, figure hb. The grid of the absorber valve (21) is connected to the 500 volts positive tapping on the resistance (155) and the grid of the transmitting valve (22) to the 2,400 volts negative supply. Resistance (152) is short circuited and the zero potential point, explained above, will now be at some point on the resistance (153).

Marking. When the grid signalling key (219) is moved to the "marking" position, as shown in figure hc, the short circuit on the resistance (152) is removed and the grid of the absorber valve (21) is connected to the 800 volts negative potential point between the resistance (152)(153). The zero potential point will now be at some point on the resistance (152). At the same time, the grid of the transmitting valve (22) is connected to earth and, as the positive side of the G.S. rectifying system is earthed, the high resistance (154) prevents a short circuit across the 2,400 volts negative supply.

Absorber Circuit. The absorber resistance (155) is fitted in Panel 3GB, Absorber Resistance, in the safety enclosure. The total resistance is 302,000 ohms and consists of one hundred 300 ohms units and sixty-eight 4000 ohms units connected in series. The upper end and tappings on the resistance are connected to insulated terminals on the framework of the panel marked R1, R2, R3, and a portion of the resistance is short circuited by the absorber resistance switch (160) when using H/F (See figure k). The absorber circuit consists of the 302,000 ohms resistance (155) used as a potentiometer across the H.T. supply to the transmitting valves. During the "marking" periods of signalling, when the absorber valve (21) is shut down, the current taken from the H.T. supply by the absorber resistance (155) is negligible. During the "spacing" periods, when the grid of the absorber valve is connected to the 500 volts positive tapping on the potentiometer (155), the resistance of the absorber system is about 20,000 ohms as the resistance of the absorber valve (21) is then connected in parallel with the absorber resistance (155). A current comparable to the anode current of the transmitting valves will then be taken by the absorber circuit. The effective resistance of the H/F oscillatory circuit is less than that of the L/F circuit and a part of the absorber resistance (155) is short-circuited by the absorber resistance switch (36), with a consequent increase of absorber current, when using H/F. The bobbin circuit of the absorber resistance switch (160) is controlled by a contact arm on the L/F - H/F H.T. C.O.S. (26) (See figure v).

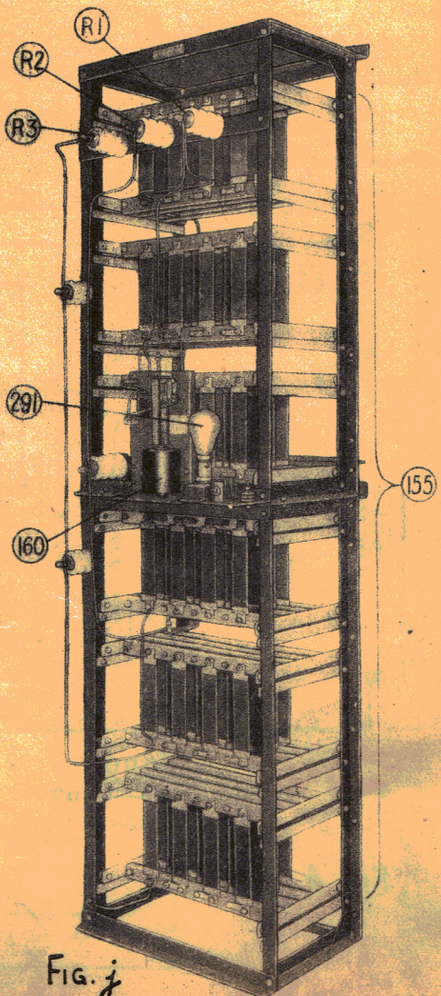

Fig. j

TYPE 36M

GRID SIGNALLING AND ABSORBER CIRCUITS (CONTD.)

Grid Signalling Rectifier Circuit. The H.T. and filament supplies for the rectifying valve (24) are obtained from two transformers (222)(235), the primaries of which are connected to the 3 kW. filament supply by the grid signalling relay (146). This relay (146) earths the anode of the rectifying valve (24) and also earths and short-circuits the smoothing condensers (221) when in the "OFF" position.

Negative and Positive Potentials for Absorber Valve (21). The 800 volts negative potential required for shutting down the absorber valve (21) during "marking" is obtained by connecting a potentiometer (152)(153) between the 500 volts positive tapping on the absorber resistance (155) and the 2,400 volts negative point at the anode of the rectifying valve (24). The resistance (152) consists of three units and resistance (153) four units of 30,000 ohms each. By tapping this potentiometer at the appropriate position the 800 volts negative potential is obtained.

The 500 volts positive potential required for making the valve (21) conduct during "spacing" is obtained by connecting the grid direct to the 500 volts positive tapping on the absorber resistance (155).

Negative Potential for Transmitting Valves. The whole 2,400 volts negative potential is required for shutting down the transmitting valves during "spacing" and this is obtained by connecting the grid of the transmitting valves in use direct to the anode of the rectifying valve (24). A 90,000 ohms resistance (154) is connected between the anode of the rectifying valve (24) and the transmitting valves grid circuit to prevent the negative potential supply from being short-circuited by the grid signalling key (219) during the "marking" periods.

The connections to the absorber and grid signalling circuits required for "spacing" and "marking" conditions described above are made by the grid signalling key (219) which is operated by the signalling key (See figure k).

When using low power, the main H.T. supply is reduced and the absorber valve is required to pass a correspondingly lower anode current. Since the potential at the original 500 volts positive tapping will be reduced, due to the lower H.T. supply, it will be seen that on low power a lower positive bias is applied to the grid of the absorber valve during spacing with a consequent reduction of absorber anode current. This arrangement can be considered as a self-adjusting system.

The 2,400 volts negative supply is independent of the power used for the transmitter but, as the negative potentials are only required for shutting down purposes, no adjustment of this supply is necessary.

The components used for the grid signalling circuits are fitted in the lower part of panel 36P, Spark and Grid Signalling, and the absorber resistance (155) in panel 36E, Absorber Resistance (See figures i and j).

The complete absorber and grid signalling circuits are shown in figure k.

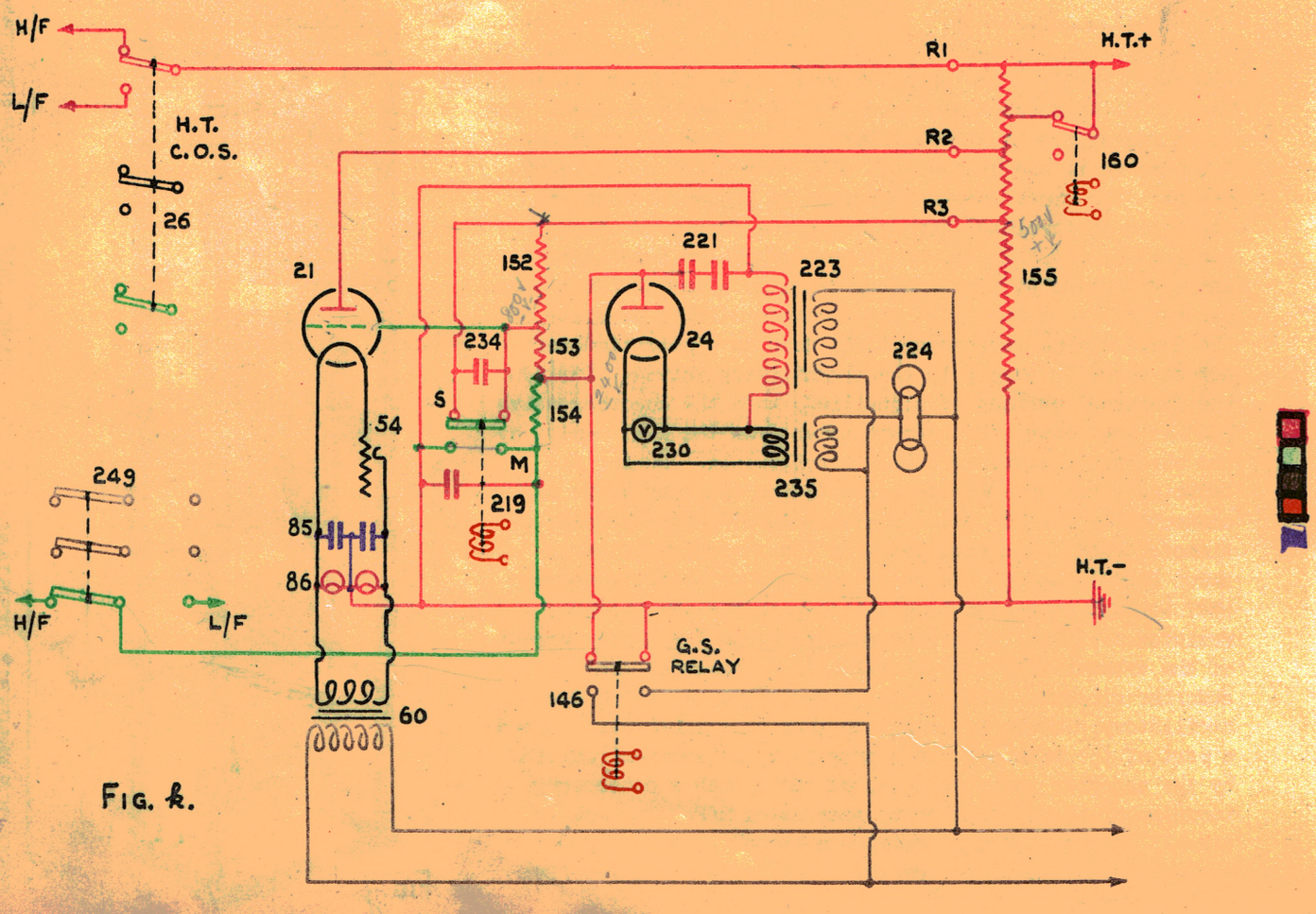

FIG. k.

TYPE 36M

RE33

TRANSMITTER 3GB, L/F.

Wave form	Method of producing oscillations	Nature of Circuit. Aerial.	Nature of Circuit. Local (or grid)	Grid excitation	Feed Aerial	Feed Local (or grid)	Aerial excitation	High oscillating potential electrode.
C.W. or I.C.W.	Self	Tuned circuit between anode and filament.	Tuned circuit between anode and grid.	Direct	Parallel.	Parallel.	Direct	Anode.

References:- Admiralty Handbook of W/T (1931) paragraphs 626 and 627 and Admiralty Handbook of W/T (1937) Vol. II, Section K, paragraph 47, figure 43.

The L/F transmitting circuit fitted in Type 36M is referred to herein as Transmitter 3GB, L/F. Most of the components are housed in Panels 3GB, Transmitting, L/F, Upper and Lower, but some are in other panels or positions as indicated by the photographs.

The circuit used in Transmitter 3GB, L/F, has been designed to reduce, as far as possible, the frequency variations which are caused in self-excited transmitters by swaying aerials or feeder systems, etc.

A tuned primary (or grid) circuit is connected between the anodes and grids of the transmitting valves (19)(20) and the tuned aerial circuit is connected between the anodes and filaments. The complete circuit diagram is shown in figure 1 and a simplified diagram in figure m.

The grids of the valves (19)(20) are controlled by the primary circuit through the four jars grid condensers (39)(40). When the primary and aerial circuits are correctly tuned, oscillations in the aerial circuit are maintained at a frequency determined principally by the constants of the primary circuit. The effect of any variation of the aerial circuit constants is thereby minimised.

The anodes of the valves (19)(20) are connected through the 1000 ohms anode resistances (50)(51) to the primary circuit by a 4000 ohms decoupling resistance (48) and a five jars condenser (49). The resistance (48) and condenser (49) provide suitable coupling for excitation of the grids of the valves (without over-excitation) and, at the same time, reduce the coupling between anodes and grids to a value below that at which the frequency of oscillation would be controlled mainly by the aerial circuit.

The H.T. supply is connected to the valves (19)(20) by one contact of the L/F - H/F H.T. C.O.S. (26) which is a hand-operated switch fitted in the rectifying panel (upper). Resistances (50)(51) of 1000 ohms each, are connected in the anode supply leads to damp out parasitic oscillations. The anode choke coil (27) and anode ammeter (28) are connected in the H.T. supply lead to the H.T. C.O.S. (26) and are, therefore, used with the L/F or H/F transmitter. The filament supply is obtained from a transformer (60) which is connected to the L/F or H/F transmitter by two contact arms of the L/F - H/F C.O.S. (249). The remaining contact arm of this switch (249) connects the grid signalling key (219) to the grid circuit of the L/F or H/F transmitter. The filament transformer (60) is fitted in the L/F transmitting panel (upper) and has an equalising unit (85)(86) connected across the secondary terminals. The centre point of this unit is earthed and forms the earth return lead for the D.C. component of the anode current of the absorber (21) and transmitting valves (19)(20)(22). Filament rheostats (52)(53) are used to regulate the supply to the valve filaments and a voltmeter (56) can be connected across each valve filament by the voltmeter C.O.S. (55).

Oscillatory Circuit. The primary (or grid) circuit consists of a variable condenser (44) and an inductance coil (43). The condenser (44) is filled with oil and has a maximum capacity of approximately 2.4 jars. The coil (43) is connected to an eight-position tapping switch which varies the inductance an equal amount on each side of its earthed centre point. The condenser (44) is controlled by a dial which has a vernier for fine adjustment.

Current in the primary circuit is indicated by an ammeter (46) and that in the grid leak circuit by a milliammeter (45) fitted in the L/F transmitting panel (upper).

Parallel feed to the aerial circuit is used and, as the H.T. supply is maintained on the anodes of the transmitting valves during the spacing periods when using grid signalling, the two 5-jars anode blocking condensers (231)(232) are connected in series thereby providing the maximum dielectric strength. A 19,000 mics choke coil (38) is connected between the common point of the anode blocking condensers (231)(232) and earth. This arrangement prevents damage to the receiving instruments from the main H.T. supply during the spacing and listening out periods if the anode key (233) sticks in the "closed" position and a short circuit develops across both condensers (231) (232) when using grid signalling.

TYPE 36M

TRANSMITTER 3GB, L/F.

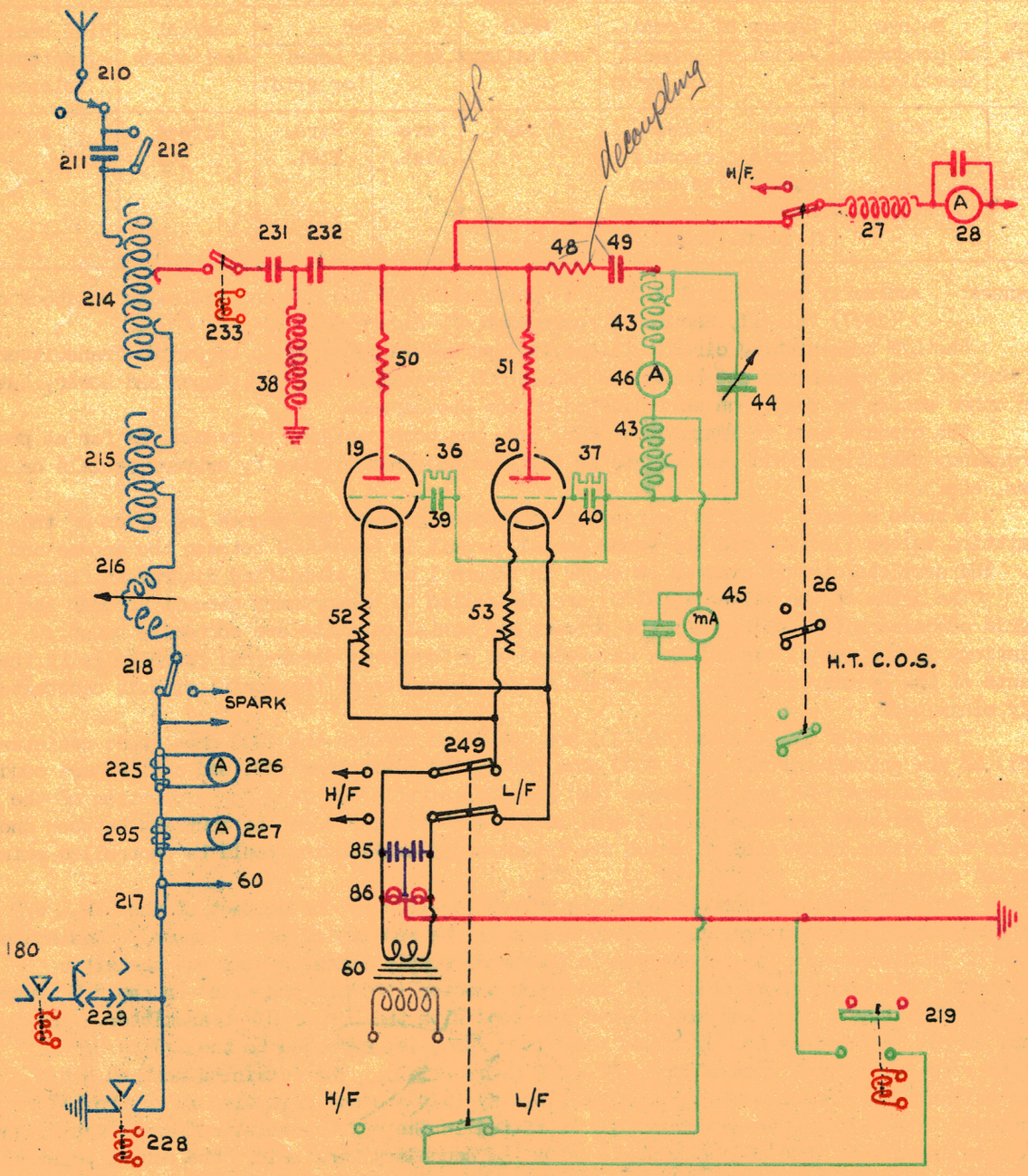

Fig. l.

SIMPLIFIED CIRCUIT.

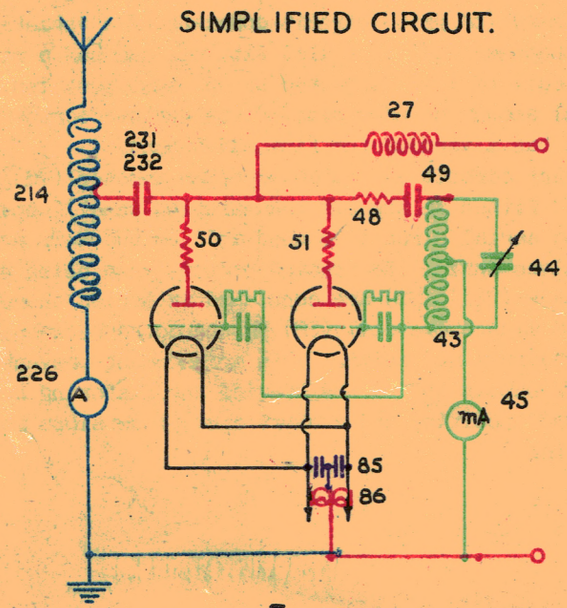

Fig. m.

TRANSMITTER 3GB, L/F. (CONTD.)

In the event of a short circuit across condenser (232) only, the choke coil (38) provides a low D.C. resistance path in parallel with the transmitting valves. A large current will then be taken from the rectifier system which should turn out the fuses (32)(33) in the anode supply to the rectifying valves (17)(18) (See figure d).

If a short circuit occurs across condenser (231) but condenser (232) remains intact, the receiving instruments are not endangered but the aerial circuit will be thrown out of tune as the inductance of the choke coil (38) will be connected in parallel with that part of the aerial circuit between the anode tapping point and earth.

The aerial circuit consists of the main aerial coil (214), 90 mic. coil (215) and the variometer (216). Aerial and anode tapping connections are made on the main coil (214) and 90 mic. coil (215) by means of flexible leads with quick-release cable eyes. These are specially designed for use in conjunction with knurled headed anti-brushing nuts similar to those fitted in the link boards of Type 36S. The variometer (216) is controlled by a dial with a vernier and is used as a fine tuning coil. A one-jar condenser (211) can be connected in series with the aerial for the higher frequencies by opening a link (212) which is connected across the condenser terminals. The aerial circuit is connected to the valve or spark set by a hand-operated switch (218) fitted in the L/F transmitting panel (lower), marked L/F aerial coupling C.O.S. This switch (218) must be set to "Valve" and the link (217), fitted on the back of the panel, must be removed when it is required to use Transmitter 6D.

The L/F aerial circuit can be connected to the cabinet switch (180) for reception purposes by means of a copper tube (229) which is clipped in a dummy fuseholder. The holder has two pairs of clips. One pair is used for L/F aerial reception, as explained above, and the other pair for connecting the receive contact of the H/F send-receive switch (80) to the cabinet switch (180) for H/F reception (See figure x).

L/F Low Power. No separate low power transmitter is fitted and the main L/F set, with a reduced anode voltage, is used when it is required to transmit on low power.

A link (279) is fitted in the 3 kW. power board whereby either one-third, one-sixth or one-twelfth power tapping can be connected to the low power contactor (275) (See figure d). By means of these tappings H.T. voltages of 4000, 2000 or 1000 volts can be obtained with the transformer secondary windings in "series" and 2000, 1000 or 500 volts with the secondary windings in "parallel".

The operating switch (228) and anode key (233) operate during signalling for all positions of the power tapping switch (170) but the cabinet switch (180) remains open when the power tapping switch (170) is set to the low power position. (See notes on D.C. switch (14).

Tuning. The grid and aerial circuits should be set to the approximate adjustments given in the Book of Instructions which is supplied with each set. Tuning is then carried out as follows:-

Couple the wavemeter G56 to the tuned grid circuit by suspending a short length of insulated wire near the grid tuning coil (43), one end of the wire being connected to the G56.

Press the transmitting key and adjust the grid tuning condenser (44) until a maximum reading is obtained in the aerial ammeter (226). This adjustment should coincide with minimum anode current.

Measure the transmitted frequency by means of the wavemeter. If the frequency differs from that required re-adjust the aerial and grid circuits in step with each other until the correct frequency is obtained, the final adjustment of the aerial circuit being obtained by means of the slow-motion dial of the aerial fine tuning variometer (216).

The anode tapping point should be adjusted as necessary to obtain the maximum aerial current with the minimum anode current.

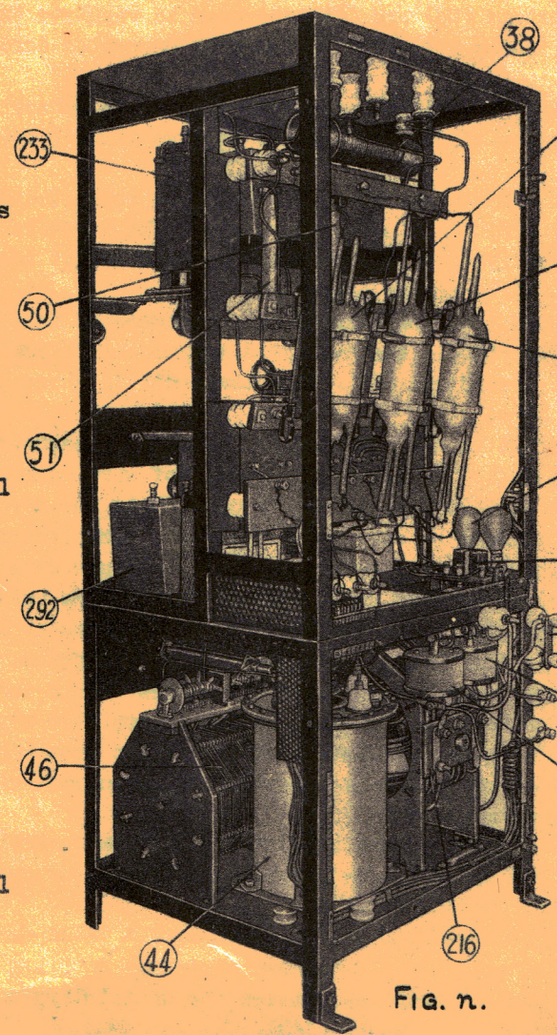

FIG. n.

RE36

TYPE 36M

TRANSMITTER 3GB, H/F.

Wave form.	Method of producing oscillations.	Nature of circuit.	Grid excitation	Feed	Aerial excitation	High oscillating potential electrode
C.W. or I.C.W.	Self	Tuned circuit between anode and grid.	Direct inductive	Series	Capacitive	Anode

References:- Admiralty Handbook of W/T (1931) paragraph 628, figure 359, and Admiralty Handbook of W/T (1937) Vol. II Section K, paragraph 47, figure 44.

The H/F transmitting circuit fitted in Type 36M is referred to herein as Transmitter 3GB, H/F. Most of the components are housed in Panels 3GB, Transmitting, H/F, Upper and Lower, but some are in other panels or positions as indicated by the photographs.

A self-excited circuit is used in which certain precautions have been taken to ensure the maximum frequency stability obtainable with this type of circuit.

The principle precautions taken are as follows:-

(a) Efficient screening between the primary and aerial circuits
(b) Approximately symmetrical arrangement of the components.
(c) Specially designed tuning coils to avoid change of inductance due to expansion of the coil conductor with heat after lengthy periods of signalling.
(d) Tilting the valve at a small angle to the vertical to limit internal vibration of the electrodes and their supports.
(e) Loose coupling between the primary and aerial circuits.

The H/F circuit has a much lower impedance value than that of the L/F circuit and only one valve is used. The full H.T. voltage cannot, therefore, be used for H/F transmissions. The lower voltage required is obtained by running the alternator, at its normal 300 volts output, as for L/F, and setting the H.T. transformer secondary switches to the "parallel" position. With the transformer secondaries in parallel the auto-transformer tapping switch can be set to any position without fear of applying an excessive voltage to the H/F valve. It will also be found that variations in H.T. voltage during signalling are reduced by this method.

The H.T. supply is connected to the H/F circuit by one contact arm of the L/F - H/F H.T. C.O.S. (28).

The filament supply is obtained from the transformer (60) which is also used for the L/F and absorber valves and is connected to the H/F valve (22) by the L/F - H/F C.O.S. (249). Filament rheostats (54) and (66) are used to regulate the supply to the absorber and H/F valve, respectively, and a voltmeter (56) can be connected across each valve filament by the voltmeter C.O.S. (55).

Oscillatory Circuit. The oscillatory circuit is connected between the anode and grid of the valve (22) and consists of one of a series of five plug-in coils (72) and a 125 cms. variable condenser (73).

The centre tapping on the coils is connected direct to the H.T. supply and by a 0.08 jar condenser (76) to filament and earth. The variable condenser (73) is of the quadrant type with one set of fixed vanes connected to each end of the tuning coil (72), the moving vanes being at a floating earthy potential.

A 2000 ohms resistance (74) is connected in the anode lead and a 100 volt 50 c.p., resistance lamp (61) in the grid lead to prevent "blocking" of the valve (see Admiralty Handbook of W/T (1931), paragraph 532). The lamp (61) is short-circuited by a link (64) for frequencies above 13,000 kc/s.

Current in the oscillatory circuit is indicated by an ammeter (107) which is coupled to the tuning coil (72) by a short length of wire connected across the ammeter terminals.

The oscillatory circuit is coupled to the aerial by means of two fixed condensers (77) (78). These condensers have three elements, viz., inner, centre and outer. For the higher frequencies the inner and centre elements only are used and the capacity is then 3 cms. When using coil 6A, 9A or 14A, for the lower frequencies, studs on the coil holders depress contacts in the coil mounting which connect the inner and outer elements of the condensers in parallel and the capacity is then 8 cms. Even with this arrangement over-coupling between the primary and aerial circuits may occur on some frequencies within the range of the set. Over-coupling can usually be detected by listening to the transmitted note which will be unsteady if the circuits are over-coupled. If this occurs the effective coupling can be reduced by slightly de-tuning the aerial circuit. When this is done the aerial current reading is reduced but the transmitted note should remain steady.

The aerial circuit consists of a 30 cms. variable tuning condenser (83) and a tapped tuning coil (81) which can be connected in series or parallel as desired by the H/F aerial series-parallel switch (65).

A direct reading aerial ammeter (82) is connected in the earth return lead from the aerial tuned circuit. A single turn wavemeter coupling coil (148) is fixed near the tuning coil (72). The amount of coupling between the oscillatory circuit and the wavemeter is controlled by a 0.12 jar variable condenser (149).

A send-receive switch (80) is fitted in the aerial circuit and the main aerial is connected to the H/F transmitter by means of a flexible lead (210).

TYPE 36M

TRANSMITTER 3GB, H/F.

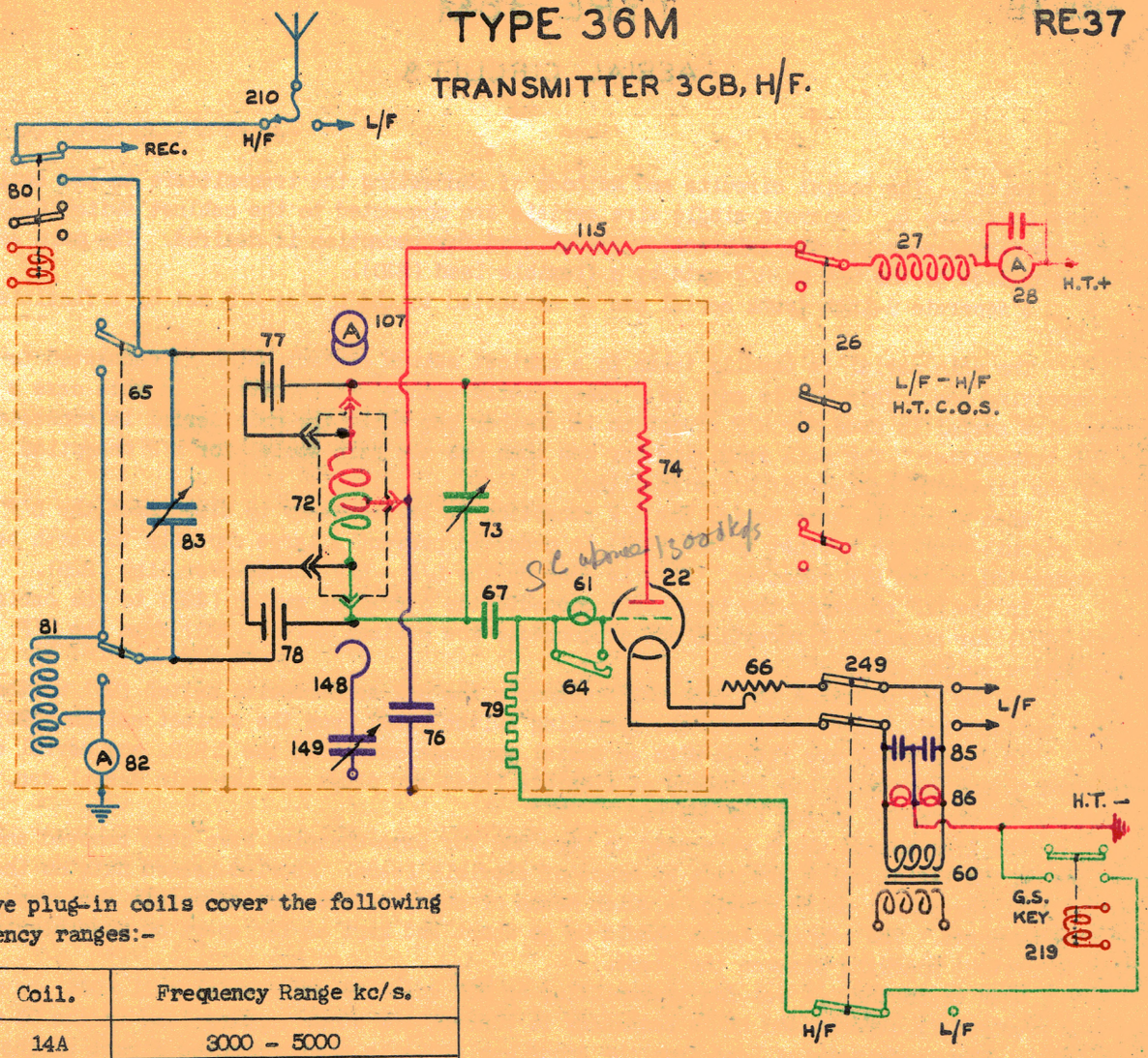

FIG. 0.

The five plug-in coils cover the following frequency ranges:-

Coil.	Frequency Range kc/s.
14A	3000 - 5000
9A	5000 - 7000
6A	7000 - 10,000
4A	10,000 - 13,000
2A	13,000 - 20,000

Tuning. Plug in the appropriate tuning coil (72) for the frequency required and set the primary tuning condenser (73) to its approximately correct position.

Connect the wavemeter to the wavemeter coupling terminal on the front of the H/F panel.

Press the transmitting key and measure the transmitter frequency. Re-adjust the primary tuning condenser (73) until the correct frequency is obtained.

Adjust the aerial condenser (83) and aerial coil (81), using the series and parallel positions, until a maximum reading is obtained in the aerial ammeter (82).

Check the transmitter frequency. If incorrect, set the wavemeter to the correct frequency and re-adjust the primary tuning condenser (73) until the correct frequency is obtained.

Re-adjust the aerial tuning condenser (83) for maximum aerial current. It may then be necessary to re-adjust slightly the primary tuning condenser (73) and aerial condenser (83) to obtain the correct frequency and maximum aerial current.

Note:- The capacity of the aerial tuning condenser (83) will determine the amount of energy transferred from the primary to the aerial circuit. For a given frequency the smallest value of aerial condenser (83) should be used to obtain optimum results.

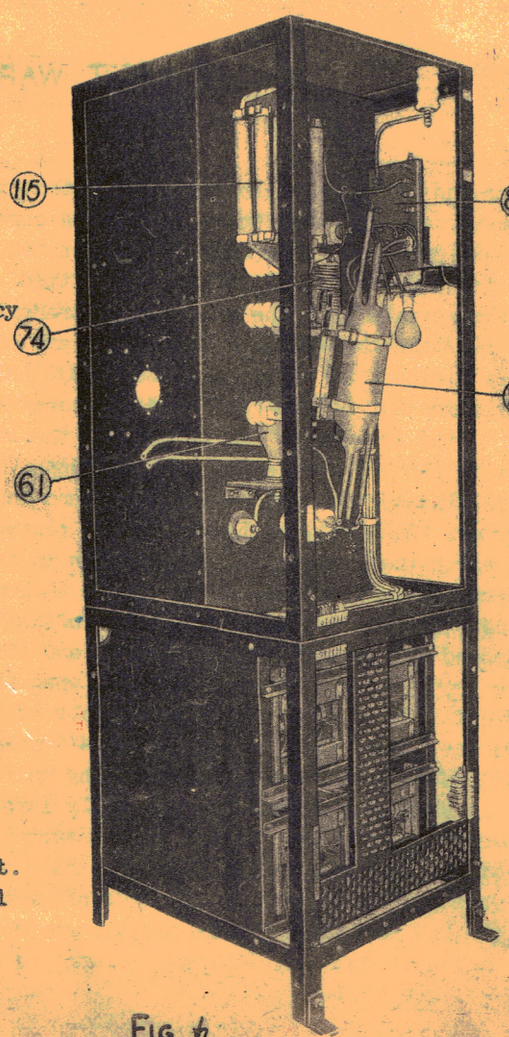

FIG. 1.

TYPE 36M

AERIAL CIRCUITS.

Aerial Circuits. The aerial circuits and methods of connecting the transmitters to the aerials are shown in figure q. Separate single wire aerials are connected to the cabinet switch (180) for the receiving sets and the main aerial can be used for reception if desired. The main aerial can be connected to the L/F or H/F sets by a flexible lead (210).

A separate 8-inch trunk aerial can be connected to the L/F or H/F set by a flexible lead (230).

The main aerial is usually taken to a cabinet switch contact which is connected to the main receiving bay. This bay is not, as a rule, fitted with a H/F receiver. In this case a single wire aerial is used for H/F reception in another bay while the main aerial is connected to the H/F transmitter. The main receiving bay can then use the main aerial for M/F reception during the listening periods of H/F signalling.

When using the main aerial for H/F reception it is necessary to disconnect the L/F aerial circuit from the cabinet switch (180) in order to prevent a large capacity to earth being left connected to the H/F receiver. This is done by the L/F - H/F change-over link (229).

In the L/F position the link (229) connects the operating switch (228) to the cabinet switch (180) for normal L/F reception and disconnects the cabinet switch (180) from the H/F send-receive switch (80).

In the H/F position the link (229) connects the H/F send-receive switch (80) to the cabinet switch (180) and disconnects the operating switch (228) from the cabinet switch (180).

In ships which are fitted with an aerial exchange outfit in the C.R.R. any aerial can be connected to any receiving bay by means of flexible leads and plugs and the main aerial can, therefore, be connected to any bay desired.

The link boards which were used in Type 36S for wave-changing have been removed and the tappings on the aerial coils are made by means of flexible leads. Knurled-headed nuts on the terminals of the aerial coils provide a quick means of changing the tapping points for wave-changing purposes. The tapping leads should be as short and kept as far apart as possible in order to prevent sparking between the leads.

When using the L/F set for transmitting on 500 kc/s the main aerial coil (214) is not usually required in circuit and it is necessary to connect the anode tapping lead to the 90 mic. coil (215). The anode tapping lead from the anode key (238) is then connected direct to the appropriate terminal on the 90 mic. coil (215).

20 VOLT WARNING CIRCUITS.

20 Volt Warning Circuits. In order to protect the receiving gear in the D/F and Second offices when the main set is transmitting, a warning circuit is fitted which consists of loud sounding buzzers (202)(206) and lamps (203)(207) operated by the 20 volt supply from the Board 2G Charging.

The D/F and Second offices are fitted with aerial safety switches (601) and (208) for earthing the aerials when the main set is transmitting or the office is not in use. In the "receive" position the switches (601)(208) are connected as shown in figure r, and complete the 20 volt supply to the loud sounding buzzers (202)(206). When the operator in the main office makes the filament control switch (163) and the power tapping switch (170) is set to any position except "low power", the 20 volt supply is made to the loud sounding buzzers (202)(206) and warning lamps (203)(207) in the D/F and Second offices respectively. The warning lamps (203)(207) will burn as long as the filament control switch (163) and power tapping switch (170) are made but the circuit to the buzzers (202)(206) is broken by the respective aerial safety switches (601)(208) when the operators earth their aerials. In addition to breaking the circuit to the buzzers (202)(206) the aerial safety switches complete the supply to reply lamps (204) and (205) fitted on Board 2GB Controlling. The reply lamps (204)(205) indicate to the operator in the main W/T office that the D/F and Second office aerials are earthed and it is safe to transmit. A gate switch contact (201) breaks the supply to the lamps (203)(207) when the gate is opened. An additional contact on the L/F - H/F H.T. C.O.S. (26) breaks the supply to the buzzers (202)(206) and warning lamps (203) (207) when the C.O.S. (26) is set to the H/F position as it is not necessary to earth the D/F and Second office aerials when transmitting on the H/F set.

It should be noted that the reply lamps (204)(205) will light when the aerials in the D/F and Second offices are earthed by the aerial safety switches (601)(208) irrespective of the position of the filament control switch (163), power tapping switch (170), L/F - H/F H.T. C.O.S. (26) and gate switch contact (201), thus affording the main W/T Office a permanent indication whenever the D/F or Second Office aerials are earthed.

TYPE 36M

RE 39

AERIAL CIRCUITS.

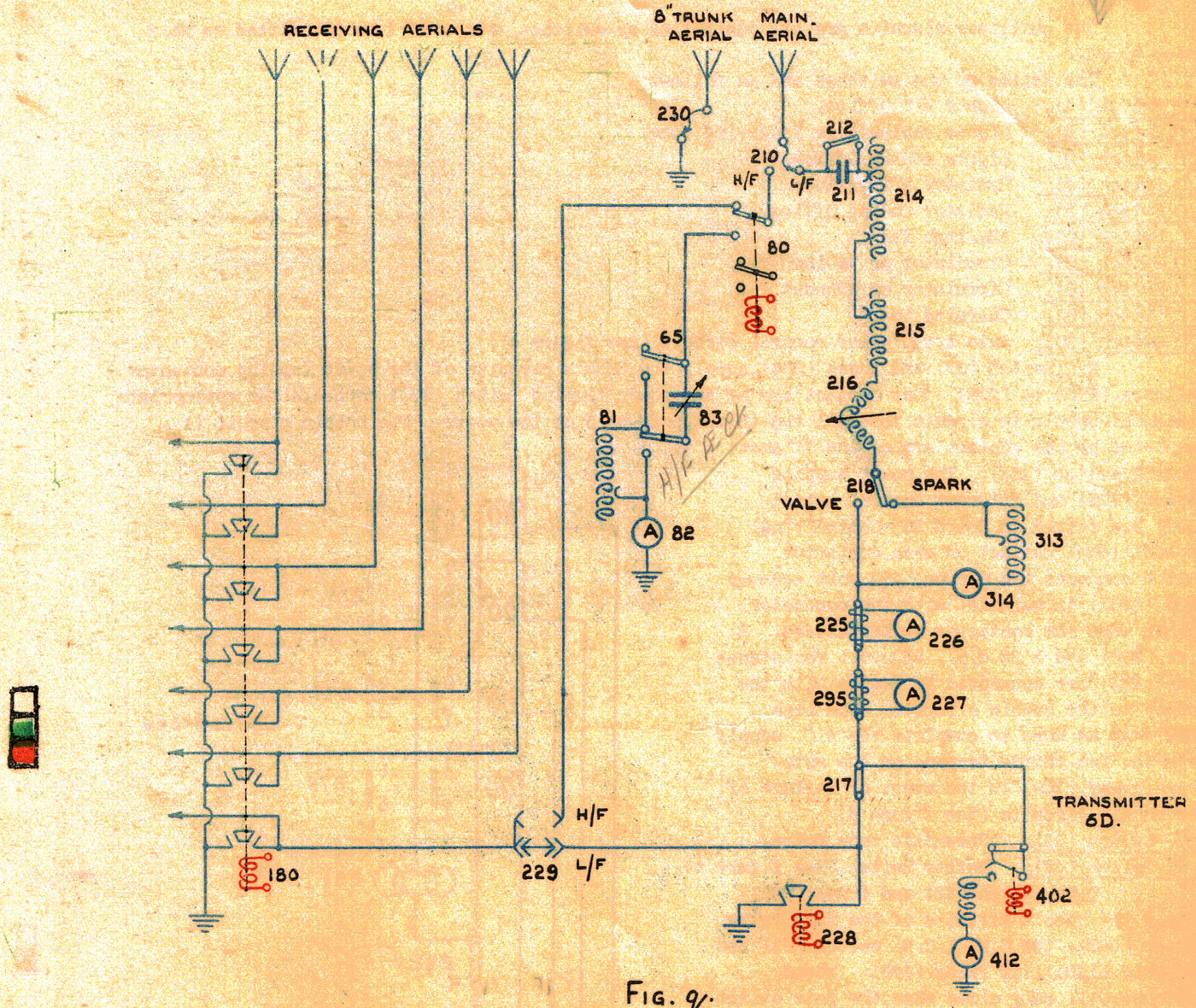

FIG. 9.

20 VOLT WARNING CIRCUITS.

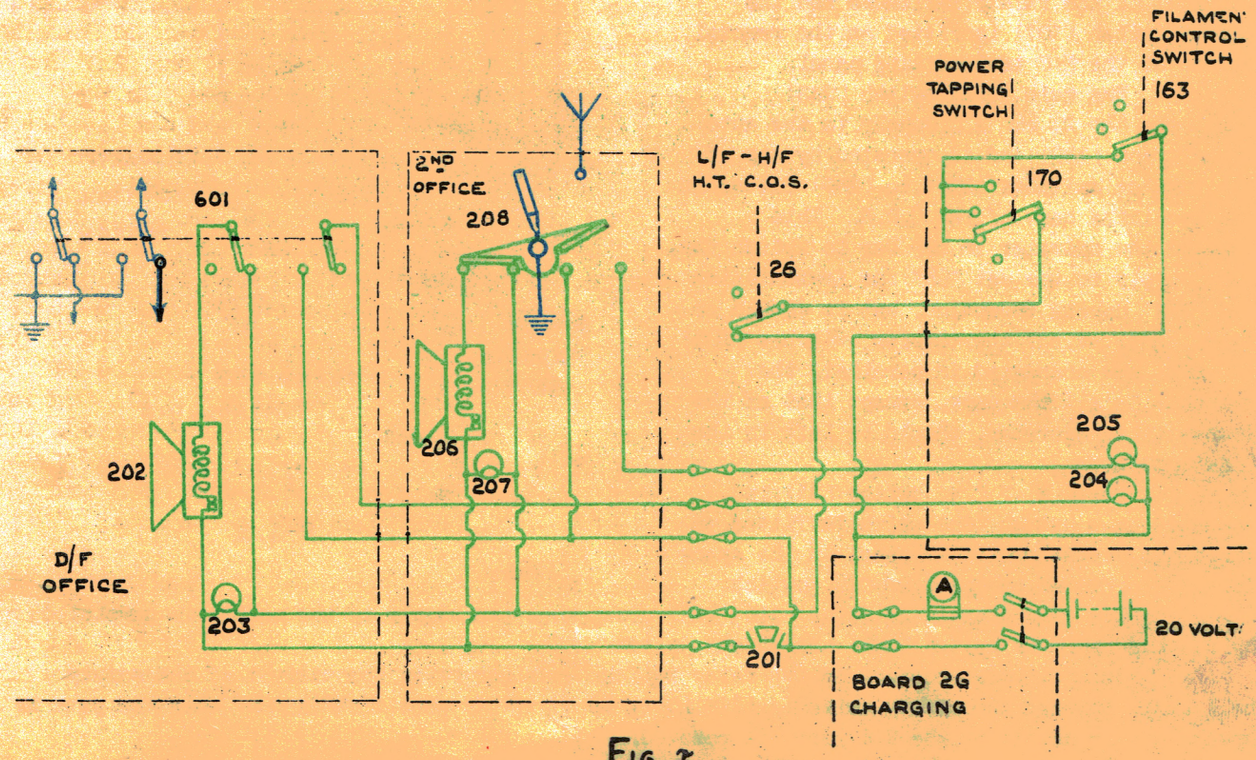

FIG. 7.

TYPE 36M

D.C. AUXILIARY CIRCUITS.

The auxiliary circuits are all controlled by switches, numbered 1 to 16, fitted on No.3 power board.

The duties of the switches are as follows:-

D.C.Switch (1). Lights W/T Office.
D.C.Switch (2). Lights cabinets or receiving room.
D.C.Switch (3). Lights coding Office.
D.C.Switch (4). Radiator W/T Office.
D.C.Switch (5). Radiator Coding Office.
D.C.Switch (6). 12½-inch fan.
D.C.Switch (7). Circulator or 7½-inch fan.
D.C.Switch (8). Circulator or exhaust fan.
D.C.Switch (9). Charging board.
D.C.Switch (10). Auto-transformer control circuit (see figure s).

D.C.Switch (10) and fuses (264) supply the bobbin circuits of the power tapping contactor switches (275) to (278). One contact arm of the power tapping switch (170) connects the appropriate contactor bobbin in circuit for full two-thirds, one-half or low-power. The bobbin circuit is completed by one contact arm of the filament control switch (163). The power tapping switch (170) and filament control switch (163) are fitted in Board 2GB Controlling. An additional contact on each contactor switch connects two 8-c.p., 110 volt economy lamps (281) in parallel with the contactor bobbin when the contactor switch closes. A link (282) and a 32-c.p., 220-volt resistance lamp (283) are connected in series with the supply to the bobbin circuits. The link (282) can be used to complete the A.C. supply from the two-thirds tapping on the auto-transformer (169) in the event of failure of the bobbin circuits (See figure d).

D.C. Switch (11). Pneumatic tube motor.
D.C. Switch (12). Safety Switch (See figure t).

D.C. switch (12) and fuses (266) supply the bobbin circuits of the main relay switch (243), the C.W.-I.C.W. switch (31) and the grid signalling relay (146). These switches will only close when the gate switch contact (168) and safety switch (167) are closed. The gate switch (168) is part of the five-contact safety switch fitted on the door of the safety enclosure and the safety switch (167) is fitted on the removal screen on the H/F transmitting panel.

The main relay switch (243) completes the 20-kW. A.C. supply to the auto-transformer (169) and is operated by any of the tumbler switches (286) to (289) fitted in the receiving bays of the C.R.R. This enables the operator in any bay to switch the H.T. supply to the set "ON" for transmission and "OFF" during reception, but it should be noted that, as all the tumbler switches (286) to (289) are connected in parallel, the switches in all the bays, except that of the transmitting operator, should be left in the "OFF" position.

The C.W.-I.C.W. switch (31) is operated by a switch (69) which is fitted on the front of the rectifier panel in the space formerly occupied by the T.T.-C.W. switch.

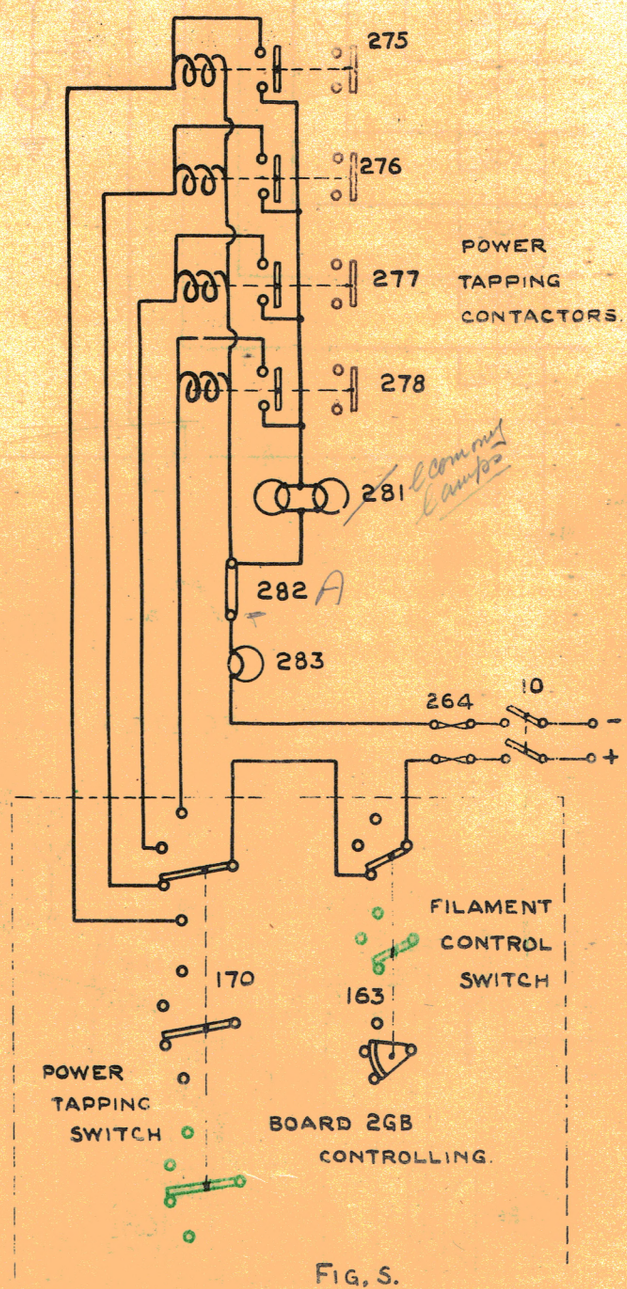

FIG. S.

The grid signalling relay (146) will close when the supply to the bobbin is completed by closing the gate switch (168) and safety switch (167).

An additional contact on the relay switch (243) completes the circuit of the safety bell (175) through the safety switches (173)(174) if the relay should stick "ON" when the gate is opened or the screen on the H/F panel is removed.

D.C. AUXILIARY CIRCUITS (CONTD.)

The gate switch contact (173) is part of the five contact safety switch fitted on the door of the safety enclosure. The safety switch (174) is fitted on the front of the H/F panel. The switches (173)(174) are broken when the gate is closed and the H/F panel screen is secured in position thus preventing the alarm bell (175) ringing when the relay switch (243) is made while the gate is closed and the H/F screen in place.

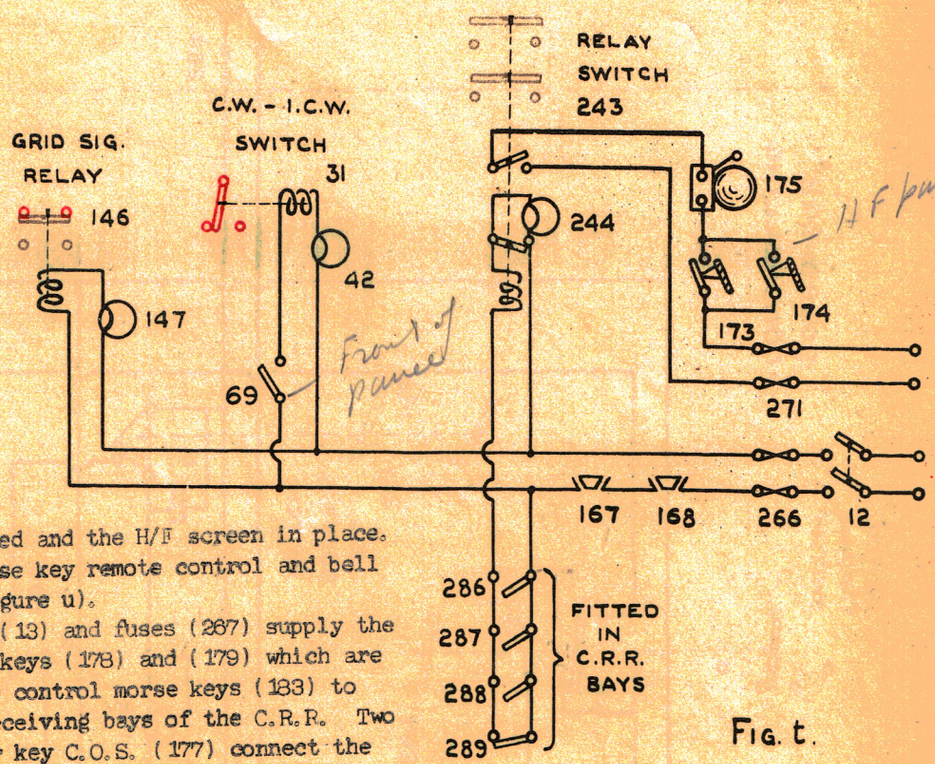

FIG. t.

D.C. Switch (13). Morse key remote control and bell signal circuit (See figure u).

D.C. switch (13) and fuses (287) supply the bobbins of the master keys (178) and (179) which are operated by the remote control morse keys (183) to (187) fitted in the receiving bays of the C.R.R. Two contacts of the master key C.O.S. (177) connect the bobbins of the master keys in circuit as required. The morse key selector switch (189) connects the morse keys in the receiving bays to the master key in use as re uired. The remote control office morse key (188) is independent of the selector switch (189) and is connected in circuit by a tumbler switch (191) on the Board 2GB Controlling.

The bell and signal circuit is supplied from D.C. switch (13) and provides a means of communication between the operator in the C.R.R. and the operator making adjustments to the transmitter. A bell (194) and two lamps (193) and (195) marked "START UP" and "SWITCH OFF" respectively are fitted in the power boards. The bell is used to attract the outside operator's attention and the lamps indicate the receiving operator's requirements. The lamps and bell are controlled by the signalling switch (192) on the Board 2GB Controlling. A reply lamp (197) on the control board is operated by a push switch (196) on the power board to enable the outside operator to signal to the receiving operator when adjustments to the set have been made.

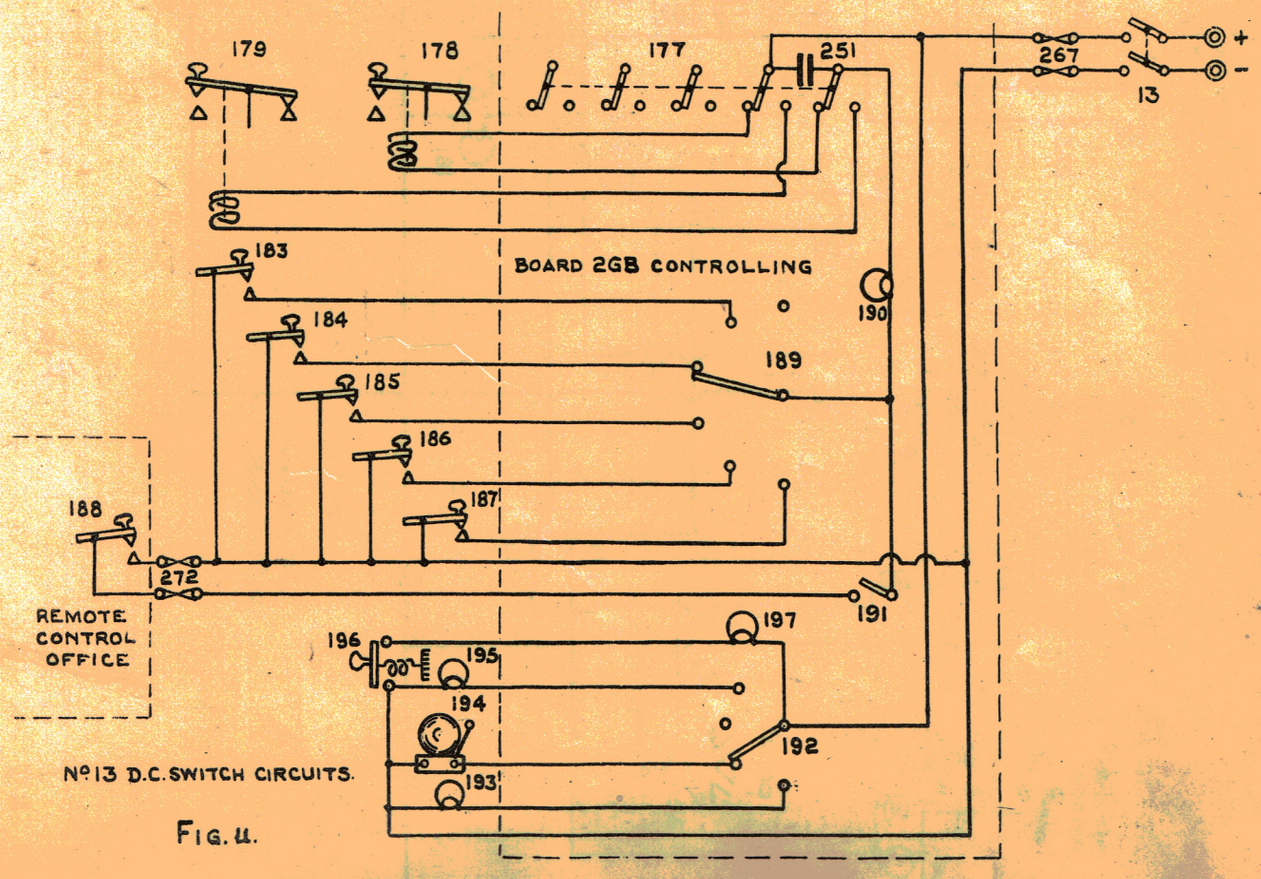

FIG. u.

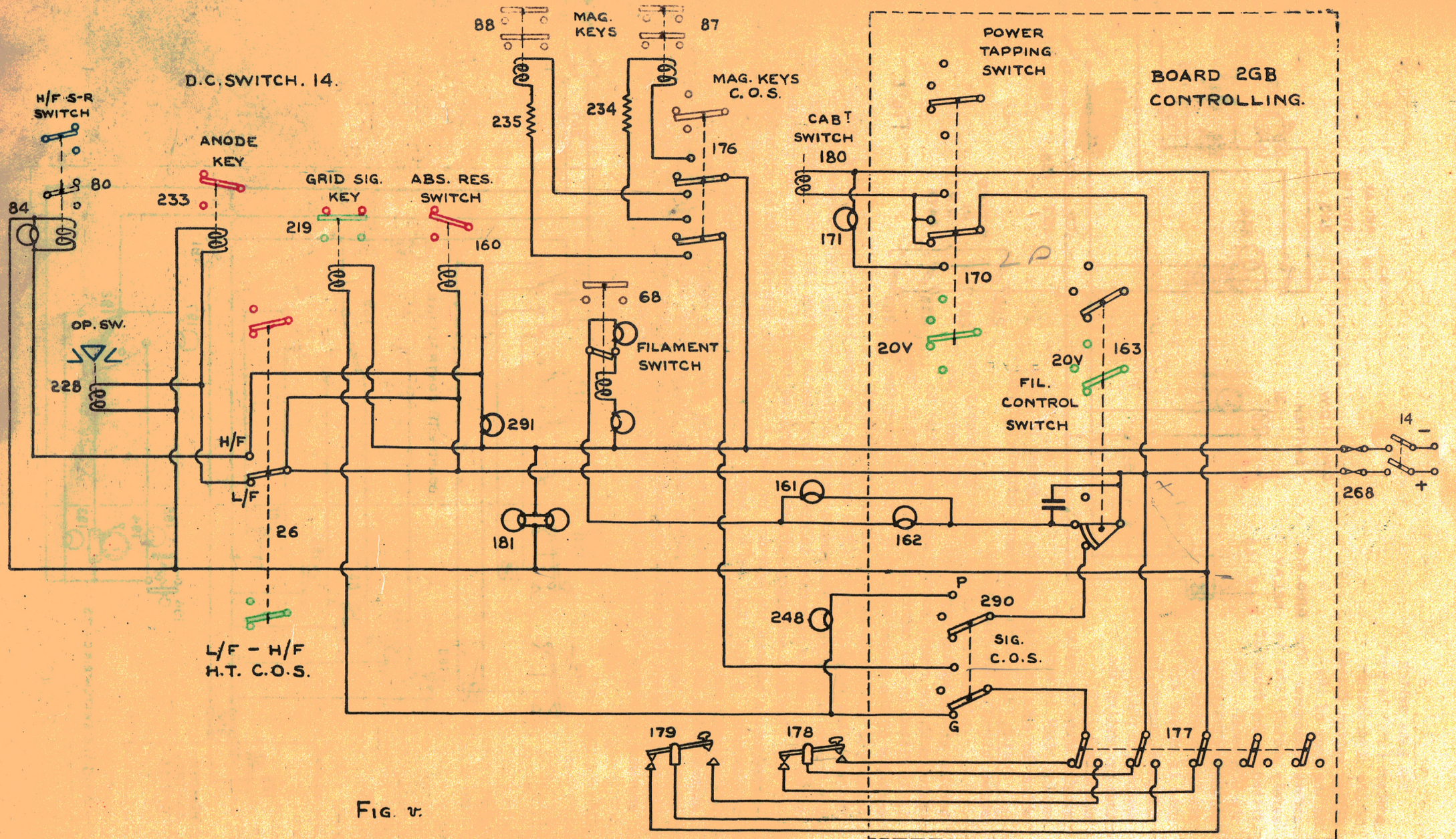
D.C. SWITCH. 14.
H/F S-R SWITCH
84
80
ANODE KEY
233
GRID SIG. KEY
219
ABS. RES. SWITCH
160
88
MAG. KEYS
87
235
234
MAG. KEYS C.O.S.
176
68
FILAMENT SWITCH
OP. SW.
228
291
H/F
L/F
26
181
L/F - H/F H.T. C.O.S.
BOARD 2GB CONTROLLING.
POWER TAPPING SWITCH
CAB.T SWITCH
180
171
170
20V
20V
163
FIL. CONTROL SWITCH
14
268
161
162
248
P
290
SIG. C.O.S.
G
179
178
177

FIG. V.

D.C. AUXILIARY CIRCUITS (CONTD.)

D.C. Switch (14). Key and Filament Switch circuit (See figure v).

D.C. switch (14) and fuses (288) supply the master key circuits for operating the magnetic keys (87)(88) for primary signalling or the grid signalling key (219) for grid signalling, the operating switch (228) cabinet switch (180), anode key (233) and H/F send-receive switch (80). The absorber resistance switch (160) and filament switch (68) are also supplied from D.C. switch (14). Three contacts of the master key C.O.S. (177) connect the operating circuits to the master key required. The magnetic keys (87)(88) are connected in circuit by two contacts of the magnetic key C.O.S. (176). When using primary signalling, care must be taken that both change over switches (176) and (274) are set to the same key (See figure d).

The master key in use is connected to the magnetic key C.O.S. (176) or grid signalling key (219), for primary or grid signalling, respectively, by the signalling C.O.S. (290) fitted on Board 2GB Controlling. When this switch (290) is set to "Primary" the bobbin circuit of the grid signalling key (219) is completed through a 32-c.p., 220-volt, lamp (248) and the grid signalling key is held down, thereby connecting the grid circuit of the transmitting valves to their filaments.

One contact of the L/F - H/F H.T. C.O.S. (26) connects the operating circuits to the anode key (233) and operating switch (228) or to the H/F send-receive switch (80) for L/F or H/F transmissions respectively. This contact also short circuits the bobbin of the absorber resistance switch (160) when the L/F - H/F H.T. C.O.S. (26) is in the H/F position.

A 32-c.p., 220 volts or 16-c.p., 110 volts resistance lamp (291) is connected in the bobbin circuit of the absorber resistance switch (160). This lamp (291) prevents a short circuit across the D.C. supply when the bobbin of the absorber resistance switch (160) is short circuited.

It may be found that the H/F send-receive switch (80) operates by the action of the master key when the L/F - H/F H.T. C.O.S. (26) is set to L/F. This is due to the bobbin circuit of the H/F send-receive switch (80) being completed through the bobbins of the anode key (233) and operating switch (228) in series with the resistance lamp (291). When this occurs the lamp (291) should be removed and tests made by inserting lamps of different candle power until a suitable resistance lamp is found which

(a) passes sufficient current to operate the absorber resistance switch (160) when using H/F
(b) has a resistance which is high enough to prevent the H/F send-receive switch operating when using L/F.

The cabinet switch (180) is operated by the action of the back contacts of the master key in the usual manner. One side of the bobbin of the cabinet switch (180) is connected to the power tapping switch (170) and the circuit is arranged so that the bobbin circuit is disconnected when the voltage tapping switch is set to "Low power" and a 50-c.p., 220 volts lamp (171) is connected in circuit in lieu of the bobbin.

The filament switch (68) is controlled by the filament control switch (163) on the Board 2GB Controlling. This switch (163) has three positions marked "OFF", "Fil." and "ON". The "Fil." position of the switch is labelled "Stop 5 seconds here" and the object of waiting in this position is to allow the filaments of the valves to reach full brilliancy before H.T. is applied to the anodes.

A spring-controlled interlocking device is fitted between the filament control switch (163) and the power tapping switch (170); this device prevents the power tapping switch (170) being moved when the filament control switch (163) is made.

D.C. Switch (15). (Spare Switch).

D.C. Switch (16). (Spare Switch).

Board 2GB Controlling. This board is fitted in the C.R.R. and, in addition to the control switches, carries the reply lamps (204)(205) which indicate when the D/F and second W/T offices are earthed, the lamp (162) which indicates when the filament switch (68) is made, the key circuit lamp (190) and the power board reply lamp (197).

The following control switches are mounted on this board:-

Signalling C.O.S. (290), see figure v.
Bridge key switch (191), see figure u.
Filament control switch (163), see figures r, s and v.
Master key C.O.S. (177), see figure v.
Power Board signal switch (192), see figure u.
Morse key selector switch (189), see figure u.
Power tapping switch (170), see figures r, s and v

BOARD 2GB, CONTROLLING.

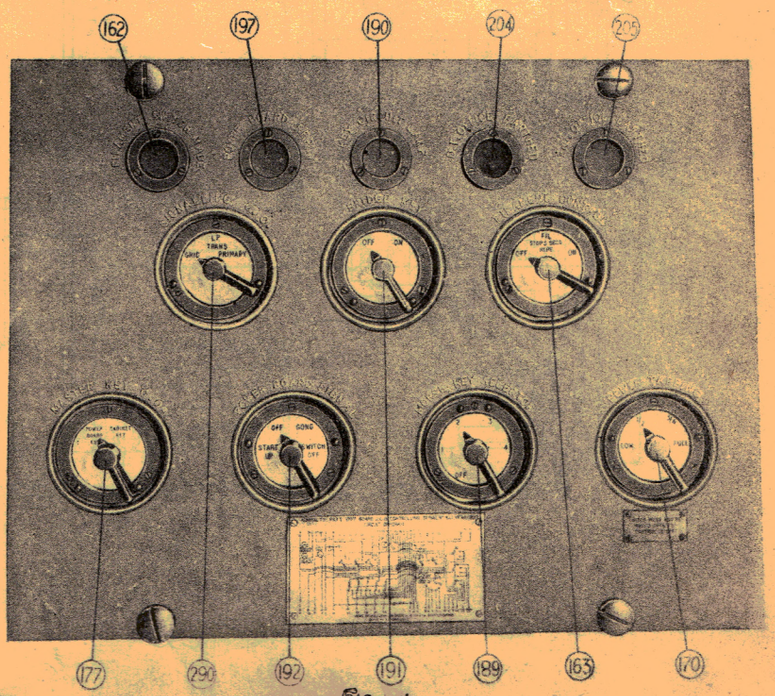

FIG. u.

TYPE 36M

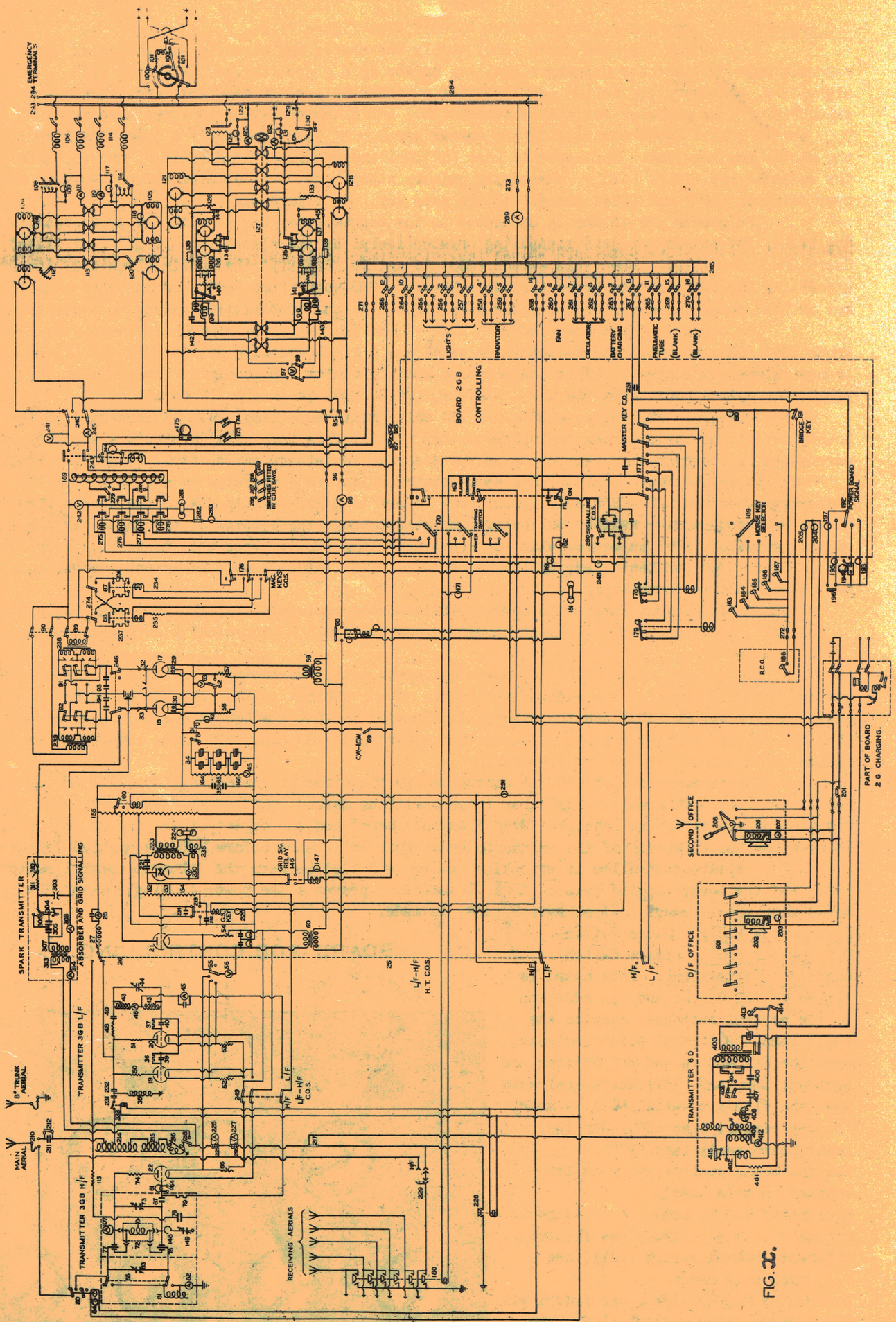

FIG. 2.

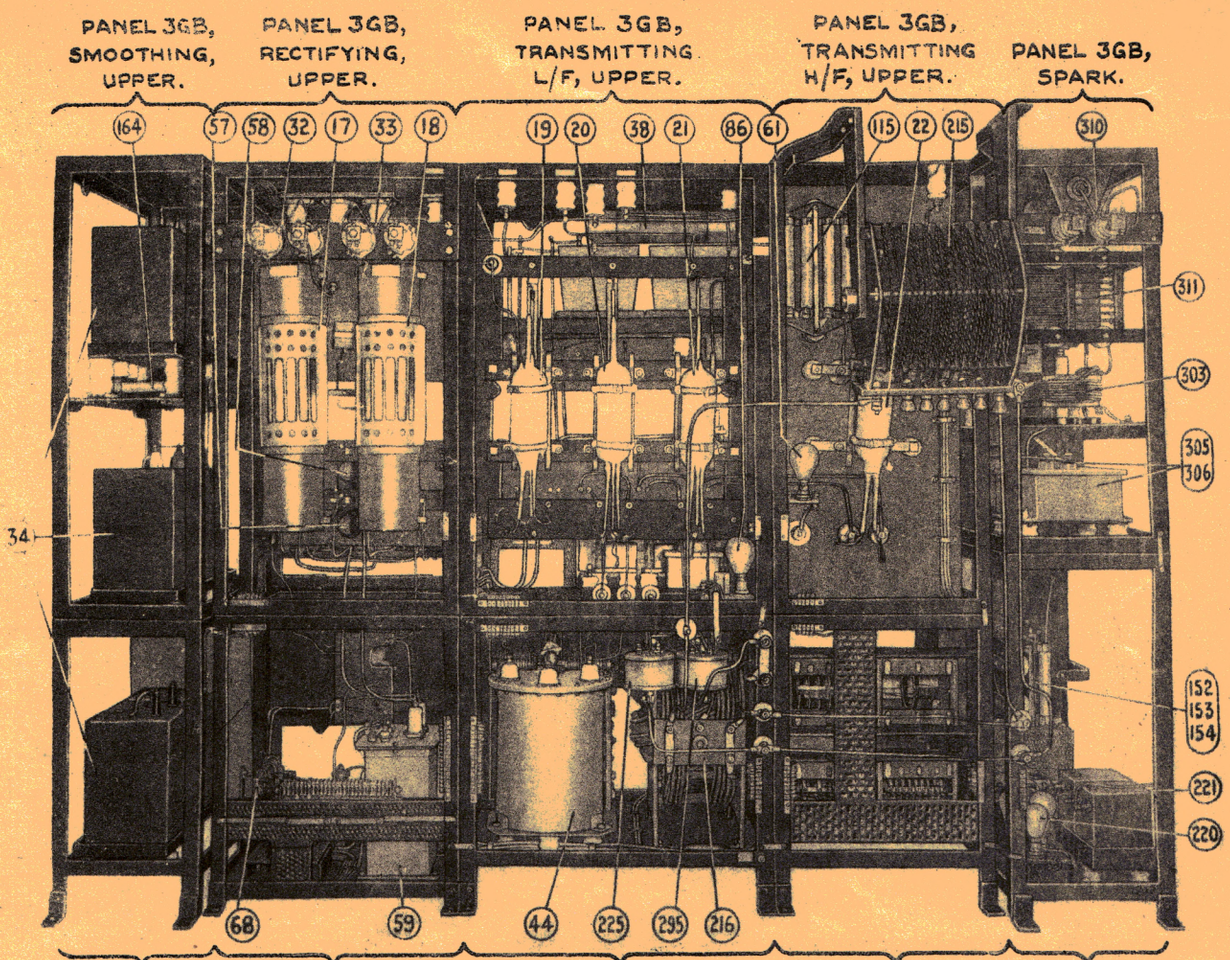
PANEL 3GB, SMOOTHING, UPPER.
PANEL 3GB, RECTIFYING, UPPER.
PANEL 3GB, TRANSMITTING L/F, UPPER.
PANEL 3GB, TRANSMITTING H/F, UPPER.
PANEL 3GB, SPARK.
164
57
58
32
17
33
18
19
20
38
21
86
61
115
22
215
310
311
303
305
306
34
152
153
154
221
220
68
59
44
225
295
216
PANEL 3GB, SMOOTHING, LOWER.
PANEL 3GB, RECTIFYING, LOWER.
PANEL 3GB, TRANSMITTING L/F, LOWER.
PANEL 3GB, TRANSMITTING H/F, LOWER.
PANEL 3GB, GRID SIGNALLING.

Fig. 2

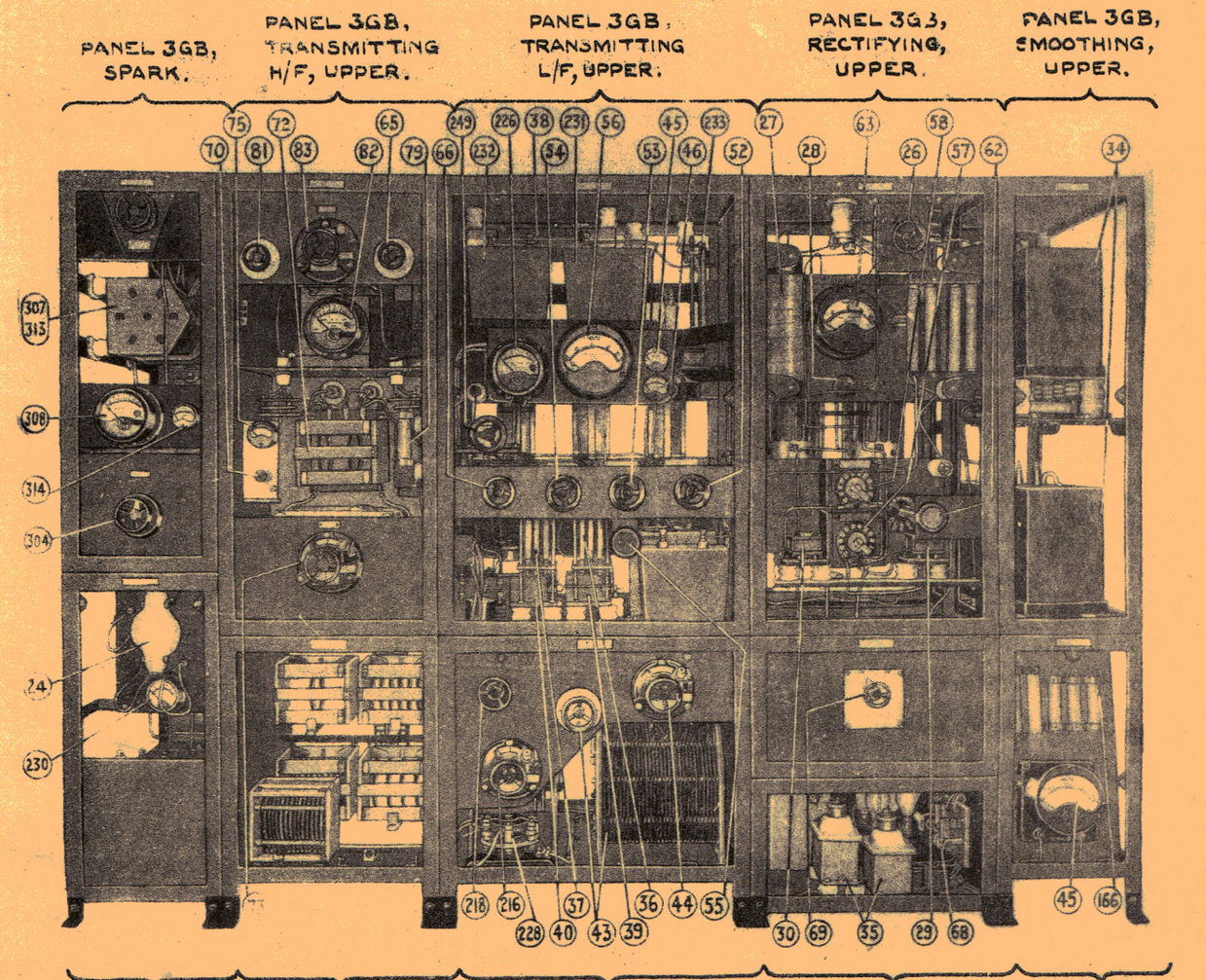
PANEL 3GB, SPARK.
PANEL 3GB, TRANSMITTING H/F, UPPER.
PANEL 3GB, TRANSMITTING L/F, UPPER.
PANEL 3GB, RECTIFYING, UPPER.
PANEL 3GB, SMOOTHING, UPPER.
75
72
65
249
226
38
231
56
45
233
27
63
58
70
81
83
82
79
66
232
54
53
46
52
28
26
57
62
34
307
313
308
314
304
24
230
218
216
228
40
37
43
36
39
44
55
30
69
35
29
68
45
166
PANEL 3GB, GRID SIGNALLING.
PANEL 3GB, TRANSMITTING H/F, LOWER.
PANEL 3GB, TRANSMITTING L/F, LOWER.
PANEL 3GB, RECTIFYING, LOWER.
PANEL 3GB, SMOOTHING, LOWER.

Fig. 3